PRELIMINARY

Am79761

Physical Layer 10-Bit Transceiver for Gigabit Ethernet (GigaPHY™-SD)

DISTINCTIVE CHARACTERISTICS

- **Gigabit Ethernet Transceiver operates at 1.25 Gigabits per second (Gbps)**
- **Suitable for both Coaxial and Optical Link applications**
- **10-bit TTL Interface for Transmit and Receive Data**
- **Monolithic Clock Synthesis and Clock Recovery requires no external components**
- **Word Synchronization Function (Comma Detect)**
- **Low Power Operation - 700 mW typical**
- **64-pin Standard PQFP**
  - **— 14 x 14 mm (0˚ C - 70˚ C)**
  - **— 10 x 10 mm (0˚ C - 50˚ C)**
- **125 MHz TTL Reference Clock**
- **Loopback Diagnostic**
- **Single +3.3 V Supply**

GENERAL DESCRIPTION

The Am79761 Gigabit Ethernet Physical Layer Serializer/Deserializer (GigaPHY-SD) device is a 1.25 Gbps Ethernet Transceiver optimized for Gigabit Ethernet/ 1000BASE-X applications. It implements the Physical Medium Attachment (PMA) layer for a single port.

The GigaPHY-SD device can interface to fiber-optic media to support 1000BASE-LX and 1000BASE-SX applications and can interface to copper coax to support 1000BASE-CX applications.

The functions performed by the device include serializing the 8B/10B 10-bit data for transmission, deserializing received code groups, recovering the clock from the incoming data stream, and word synchronization.

When transmitting, the GigaPHY-SD device receives 10-bit 8B/10B code groups at 125 million code groups per second. It then serializes the parallel data stream, adding a reference clock, and transmits it through the PECL drivers.

When receiving, the GigaPHY-SD device receives the PECL data stream from the network. It then recovers the clock from the data stream, deserializes the data stream into a 10-bit code group, and transmits it to the Physical Coding Sublayer (PCS) logic above. Optionally, it detects comma characters used to align the incoming word.

This document contains information on a product under development at Advanced Micro Devices. The information is intended to help you evaluate this product. AMD reserves the right to change or discontinue work on this proposed product without notice.

Publication# **21560** Rev: **A** Amendment/**+1**
Issue Date: **April 1998**

BLOCK DIAGRAM

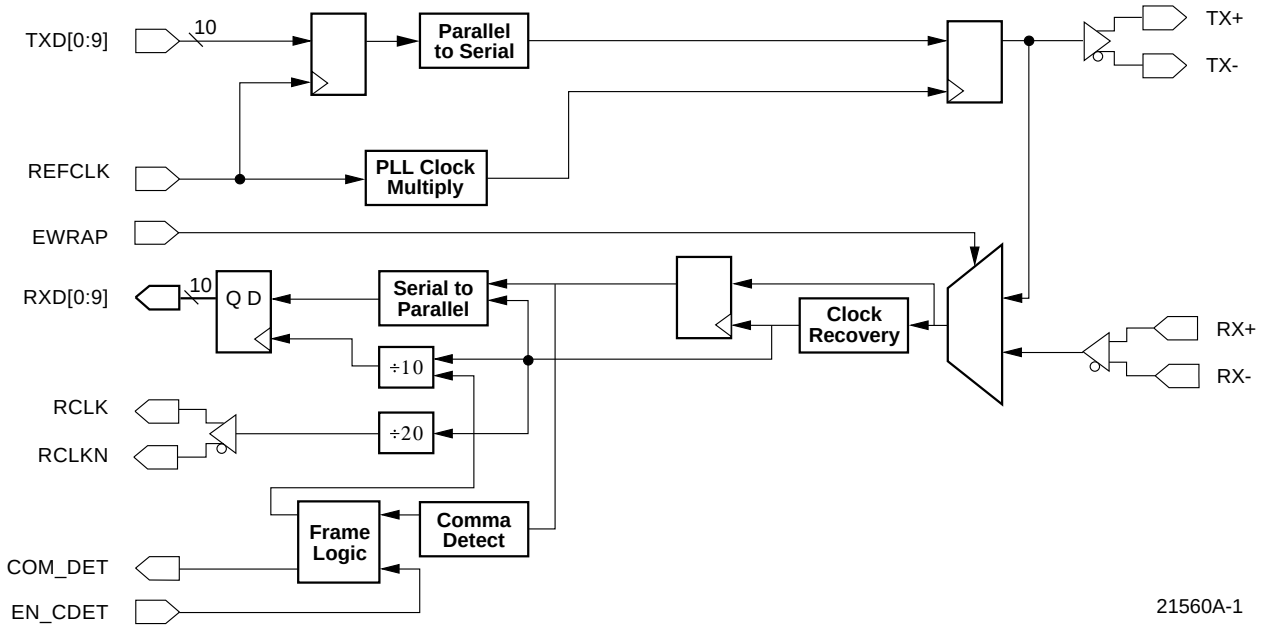

CONNECTION DIAGRAM

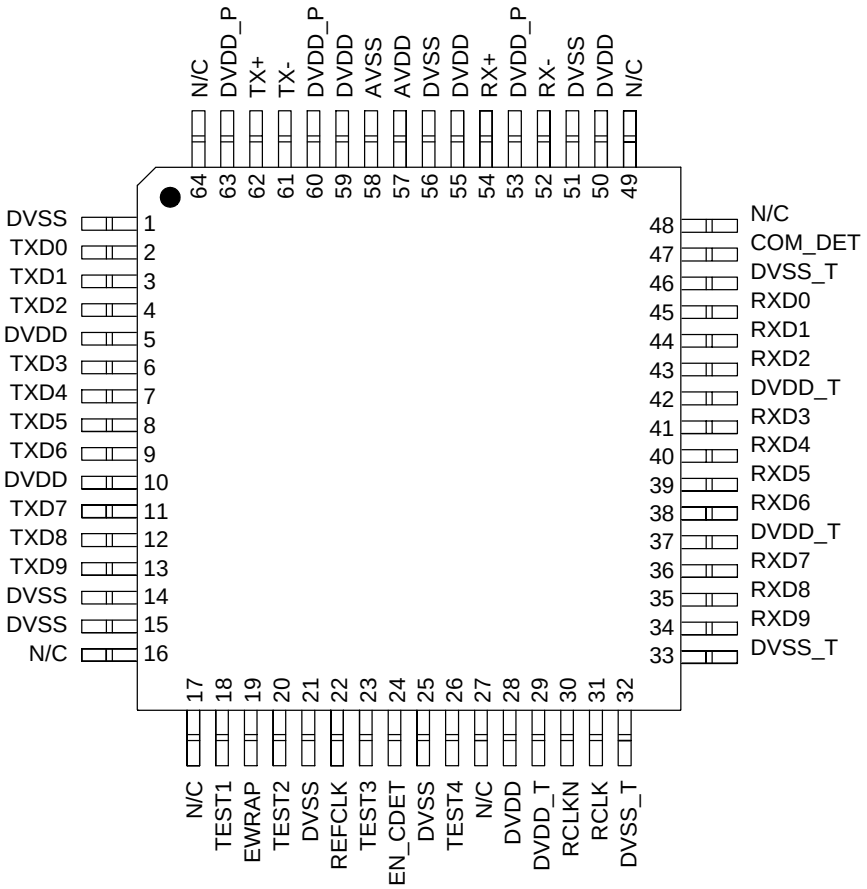

21560A-2

Note:
N/C = No Connect

LOGIC SYMBOL

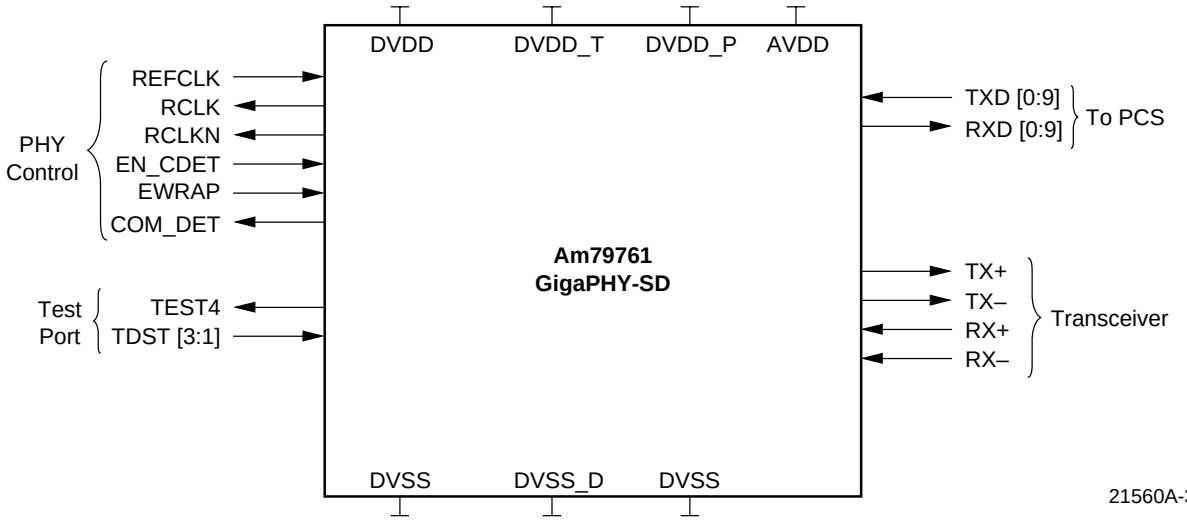

21560A-3

ORDERING INFORMATION

Standard Products

AMD standard products are available in several packages and operating ranges. The order number (Valid Combination) is formed by a combination of the elements below.

Am79761 Y C -10

PACKAGE SIZE OPTION
-10 = 10 x 10 mm body size
-14 = 14 x 14 mm body size

TEMPERATURE RANGE
C = Commercial (0˚C to +70˚C)

PACKAGE TYPE
Y = 64-Pin Plastic Quad Flat Pack (PDH064)

DEVICE NUMBER/DESCRIPTION
Am79761
Physical Layer 10-Bit Transceiver for Gigabit Ethernet
GigaPHY™-SD)

Valid Combinations	
Am79761YC	-10
Am79761YC	-14

Valid Combinations

Valid Combinations list configurations planned to be supported in volume for this device. Consult the local AMD sales office to confirm availability of specific valid combinations and to check on newly released combinations.

RELATED PRODUCTS

Part No.	Description
Am7990	Local Area Network Controller for Ethernet (LANCE)
Am7992B	Serial Interface Adapter (SIA)
Am7996	IEEE 802.3/Ethernet/Cheapernet Transceiver
Am79C90	CMOS Local Area Network Controller for Ethernet (C-LANCE)
Am79C98	Twisted Pair Ethernet Transceiver (TPEX)
Am79C100	Twisted Pair Ethernet Transceiver Plus (TPEX+)
Am79C871	Quad Fast Ethernet Transceiver for 100BASE-X Repeaters (QFEXr™)
Am79C981	Integrated Multiport Repeater Plus (IMR+™)
Am79C982	basic Integrated Multiport Repeater (bIMR™)
Am79C983	Integrated Multiport Repeater 2 (IMR2™)
Am79C984A	enhanced Integrated Multiport Repeater (eIMR™)
Am79C985	enhanced Integrated Multiport Repeater Plus (eIMR+™)
Am79C987	Hardware Implemented Management Information Base (HIMIB™)
Am79C988A	Quad Integrated Ethernet Transceiver (QuIET™)
Am79C900	Integrated Local Area Communications Controller (ILACC™)
Am79C940	Media Access Controller for Ethernet (MACE™)
Am79C960	PCnet™-ISA Single-Chip Ethernet Controller (for ISA bus)
Am79C961	PCnet™-ISA+ Single-Chip Ethernet Controller for ISA (with Microsoft® Plug n' Play® Support)
Am79C961A	PCnet™-ISA II Full Duplex Single-Chip Ethernet Controller for ISA
Am79C965	PCnet™-32 Single-Chip 32-Bit Ethernet Controller
Am79C970	PCnet™-PCI Single-Chip Ethernet Controller (for PCI bus)
Am79C970A	PCnet™-PCI II Full Duplex Single-Chip Ethernet Controller (for PCI bus)
Am79C971	PCnet™-*FAST* Single-Chip Full-Duplex 10/100 Mbps Ethernet Controller for PCI Local Bus

PIN DESIGNATION

Listed by Pin Number

Pin No.	Pin Name	Pin No.	Pin Name	Pin No.	Pin Name	Pin No.	Pin Name
1	DVSS	17	N/C	33	DVSS_T	49	N/C
2	TXD0	18	TEST1	34	RXD9	50	DVDD
3	TXD1	19	EWRAP	35	RXD8	51	DVSS
4	TXD2	20	TEST2	36	RXD7	52	RX-
5	DVDD	21	DVSS	37	DVDD_T	53	DVDD_P
6	TXD3	22	REFCLK	38	RXD6	54	RX+
7	TXD4	23	TEST3	39	RXD5	55	DVDD
8	TXD5	24	EN_CDET	40	RXD4	56	DVSS
9	TXD6	25	DVSS	41	RXD3	57	AVDD
10	DVDD	26	TEST4	42	DVDD_T	58	AVSS
11	TXD7	27	N/C	43	RXD2	59	DVDD
12	TXD8	28	DVDD	44	RXD1	60	DVDD_P
13	TXD9	29	DVDD_T	45	RXD0	61	TX-
14	DVSS	30	RCLKN	46	DVSS_T	62	TX+
15	DVSS	31	RCLK	47	COM_DET	63	DVDD_P
16	N/C	32	DVSS_T	48	N/C	64	N/C

PIN DESCRIPTION

TX+, TX-
Serial Transmit Data
PECL Output

These pins are the 1000BASE-X port differential drivers which transmit the serial stream to the network. These pins are connected to the copper or fiber optic connectors.

When EWRAP is LOW, the pins assume normal operation. When HIGH, TX+ is logic HIGH and TX- is logic LOW.

RX+, RX-
Serial Receive Data
PECL Input

These pins are the 1000BASE-X port differential receiver pair, receiving a serial stream of data from the network. These pins are connected to the copper or fiber optic connectors.

When EWRAP is LOW, the pins assume normal operation. The pins are internally biased.

TXD[0:9]
Transmit Data
TTL Input

The TXD[0:9] pin is a set of 10 data signals which are driven from the Physical Coding Sublayer (PCS) above. The 10 bits of data are clocked in parallel on the rising edge of REFCLK. TXD0 is transmitted first on TX±.

RXD[0:9]
Receive Data
TTL Output

The RXD[0:9] pin is a set of 10 data signals which are sent to the Physical Coding Sublayer (PCS) above. The 10 bits of data are clocked out in parallel on the rising edges of RCLK and RCLKN. RXD0 is received first on RX±.

REFCLK
Reference Clock
TTL Input

This input is used for the 125-Mhz clock. The rising edge of this clock latches TXD[0:9] into an input register. This clock serves as the reference clock at 1/10th the baud rate for the PLL.

RCLK, RCLKN
Receive Clock
TTL Output

These pins provide the differential receive clock signals, derived from the RX± data stream, and are at 1/20th the baud rate of the receive stream. Parallel data on RXD[0:9] is provided at each rising transition of RCLK and RCLKN.

EN_CDET
Enable Comma Detect
TTL Input

This pin is used to enable the word synchronization mode. When logic HIGH, the COM_DET output is enabled and word synchronization is active.

COM_DET
Comma Detect Indicator
TTL Output

Comma Detect is asserted to indicate that the incoming word on RXD[0:9] contains a Comma character (0011111xxx). COM_DET goes HIGH for half of a RCLK period, and can be captured when RCKLN is rising.

In order for COM_DET to provide indication, EN_CDET must be enabled (logic HIGH).

EWRAP
Loopback Enable
TTL Input

When EWRAP is asserted, the transmitted data stream is sent back to the receiver through an internal loopback path. TX+ is logic HIGH, and TX- is logic LOW in this mode.

This pin is logic LOW for normal operation.

TEST[1:3]
Factory Test Pins
Input

These pins should be tied to DVDD for normal operation.

TEST[4]
Factory Test Pin
Output

This pin should be left unconnected for normal operation.

DVDD
Power

These pins supply power to the digital blocks of the device. They must be connected to a 3.3 V ±5% source.

DVDD_T
TTL Power

These pins supply power to the TTL blocks of the device. They must be connected to a 3.3 V ±5% source.

DVDD_P
PECL Power

These pins supply power to the PECL blocks of the device. They must be connected to a 3.3 V ±5% source. It is critical that the signal supplied to these pins are clean to ensure good performance of the device.

AVDD
Analog Power

These pins supply power to the analog blocks of the device. They must be connected to a 3m.3 V ±5% source and require careful decoupling to ensure proper device performance.

DVSS
Ground

These pins are the ground connections for the digital blocks. They must be connected to the common external ground plane.

DVSS_T
Ground

These pins are the ground connections for the TTL blocks. They must be connected to the common external ground plane.

AVSS
Ground

These pins are the ground connections for the analog blocks. They must be connected to an analog ground plane.

FUNCTIONAL DESCRIPTION

Overview

The GigaPHY-SD device provides the PMA functionality for 1000BASE-X systems. The GigiaPHY-SD communicates with the PCS through the 10-bit code groups and communicates with the Physical Medium Dependent (PMD) layer to transmit and receive data from the network, through either fiber optic or copper coax media.

The GigaPHY-SD device consists of the following functional blocks:

- 1000BASE-X Transmit block including:
  - — Clock Synthesizer
  - — Serializer and Transmission interface
- 1000BASE-X Receive block including:
  - — Clock Recovery
  - — Deserializer
  - — Word Alignment and synchronization

Clock Synthesizer

The Am79761 clock synthesizer multiplies the reference frequency provided on the REFCLK pin by 10 to achieve a baud rate clock at nominally 1.25 GHz. The clock synthesizer contains a fully monolithic PLL which does not require any external components.

Serializer

The Am79761 device accepts TTL input data as a parallel 10-bit character on the TXD[0:9] bus which is latched into the input latch on the rising edge of REFCLK. This data will be serialized and transmitted on the TX PECL differential outputs at a baud rate of ten times the frequency of the REFCLK input, with bit TXD0 transmitted first. User data should be encoded for transmission using the 8B/10B block code described in the IEEE 802.3 specification.

Transmission Character Interface

An encoded byte is 10 bits and is referred to as a transmission character. The 10-bit interface on the Am79761 device corresponds to a transmission character. This mapping is shown in Table 20.

Table 20. Transmission Order and Mapping of an 8B/10B Character

Parallel Data Bits	T9	T8	T7	T6	T5	T4	T3	T2	T1	T0
8B/10B Bit Position	j	h	g	f	i	e	d	c	b	a
Comma Character	X	X	X	1	1	1	1	1	0	0

Last Data Bit Transmitted ↑ First Data Bit Transmitted ↑

Clock Recovery

The Am79761 device accepts differential high speed serial inputs on the RX± pins, extracts the clock and retimes the data. The Am79761 clock recovery circuitry is completely monolithic and requires no external components. For proper operation, the baud rate of the data stream to be recovered should be within 0.01% of ten times the REFCLK frequency. For example, if the REFCLK used is 125 MHz, then the incoming serial baud rate must be 1.25 gigabaud ±0.01 percent.

Deserializer

The re-timed serial bit stream is converted into a 10-bit parallel output character. The Am79761 device provides complementary TTL recovered clocks, RCLK and RCLKN, which are at 1/20th of the serial baud rate. This architecture is designed to simplify demultiplexing of the 10-bit data characters into a 20-bit half-word in the downstream controller chip. The clocks are generated by dividing down the high-speed clock which is phase locked to the serial data. The serial data is re-timed by the internal high-speed clock and deserialized.

The resulting parallel data will be captured by the adjoining protocol logic on the rising edges of RCLK and RCLKN. In order to maximize the setup and hold times available at this interface, the parallel data is loaded into the output register at a point nominally midway between the transition edges of RCLK and RCLKN.

If serial input data is not present or does not meet the required baud rate, the Am79761 will continue to produce a recovered clock so that downstream logic may continue to function. The RCLK and RCLKN output frequency under these circumstances may differ from their expected frequency by no more than ±1 percent.

Word Alignment

The Am79761 device provides 7-bit comma character recognition and data word alignment. Word synchronization is enabled by asserting EN_CDET HIGH. When synchronization is enabled, the Am79761 device constantly examines the serial data for the presence of the Comma character. This pattern is 0011111XXX, where the leading zero corresponds to the first bit received. The comma sequence is not contained in any normal 8B/10B coded data character or pair of adjacent characters. It occurs only within special characters, known as K28.1, K28.5, and K28.7, which are defined specifically for synchronization purposes. Improper alignment of the comma character is defined as any of the following conditions:

1. The comma is not aligned within the 10-bit transmission character such that TXD0...TXD6 = "0011111."
2. The comma straddles the boundary between two 10-bit transmission characters.
3. The comma is properly aligned but occurs in the received character presented during the rising edge of RCLK rather than RCLKN.

When EN_CDET is HIGH and an improperly aligned comma is encountered, the internal data is shifted in such a manner that the comma character is aligned properly in RXD[0:9]. This results in proper character and half-word alignment. When the parallel data alignment changes in response to an improperly aligned comma pattern, some data which would have been presented on the parallel output port may be lost. However, the synchronization character and subsequent data will be output correctly and properly aligned. When EN_CDET is LOW, the current alignment of the serial data is maintained indefinitely, regardless of data pattern.

When encountering a comma character, COM_DET is driven HIGH to inform the user that realignment of the parallel data field may have occurred. The COM_DET pulse is presented simultaneously with the comma character and has a duration equal to the data, or half of an RCLK period. The COM_DET signal is timed such that it can be captured by the adjoining protocol logic on the rising edge of RCLKN. Functional waveforms for synchronization are given in Figure 18 and Figure 19.

Figure 18 shows the case when a comma character is detected and no phase adjustment is necessary. It illustrates the position of the COM_DET pulse in relation to the comma character on RXD[0:9]. Figure 19 shows the case where K28.5 is detected, but it is out of phase and a change in the output data alignment is required. Note that up to three characters prior to the comma character may be corrupted by the realignment process.

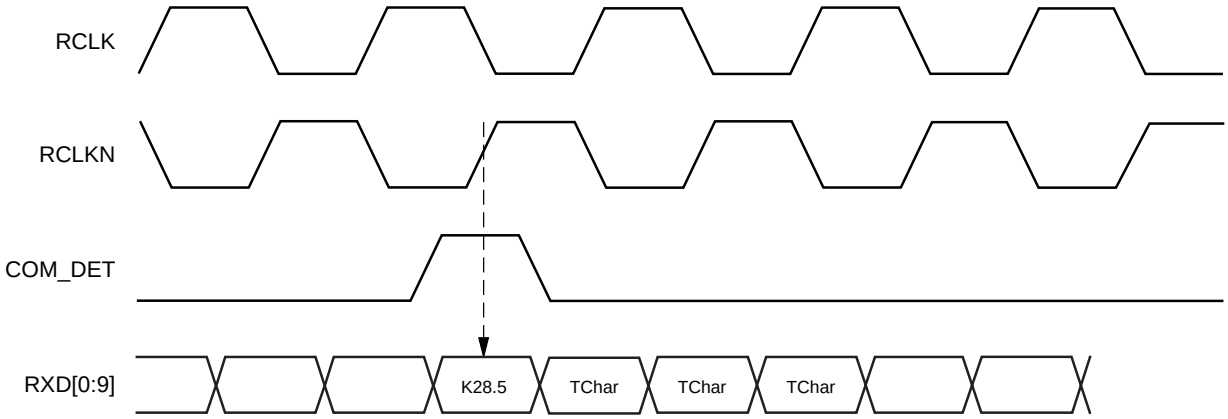

Note : TChar = 10-bit Transmission Character

21560A-4

Figure 18. Detection of a Properly Aligned Comma Character

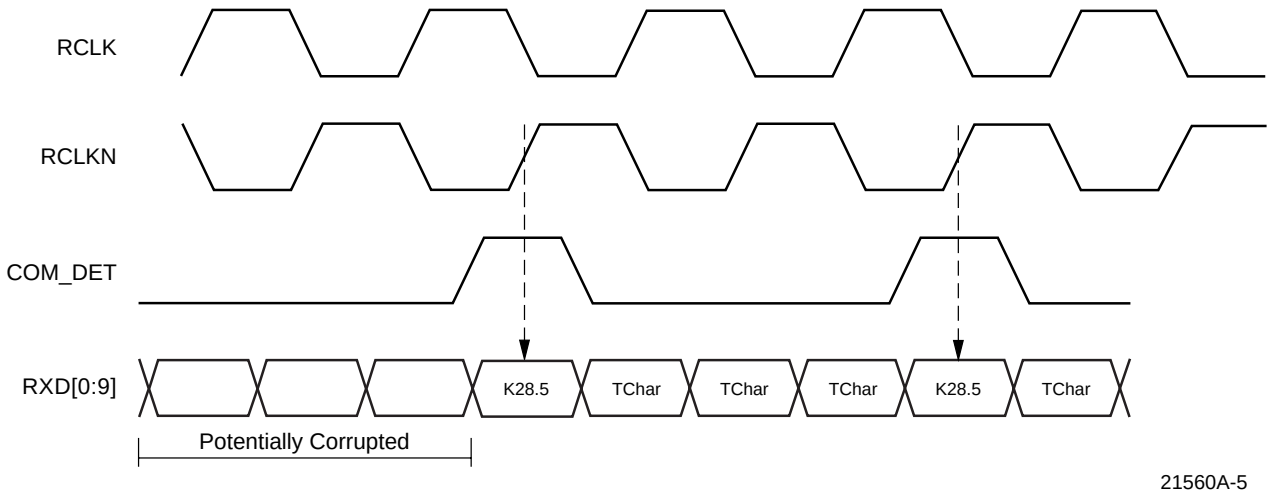

Figure 19. Receiving Two Consecutive K28.5 + TCharacter Transmission Words

ABSOLUTE MAXIMUM RATINGS

Storage Temperature . . . . . .-65° C to +150° C

Ambient Temperature Under Bias . .-55° C to +125° C

Power Supply Voltage (V_{DD}) . . . . . -0.5 V to +4.0 V

DC Voltage (PECL Inputs) . . . . . .-0.5 V to V_{DD} +0.5 V

DC Voltage (TTL Inputs). . . . . -0.5 V to +5.5 V

Output Current (TTL Outputs) . . . . . -±50 mA

Output Current (PECL Outputs). . . . . -±50 mA

Maximum Input ESD (Human Body Model) . . . 1500 V

Stresses above those listed under Absolute Maximum Ratings may cause permanent device failure. Functionality at or above these limits is not implied. Exposure to absolute maximum ratings for extended periods may affect device reliability.

OPERATING RANGES

Temperature (T_A) 0° C to +70° C for 14 x 14 mm PQFP

. . . . . 0° C to +50° C for 10 x 10 mm PQFP

Power Supply Voltage (D_{VDD}) . . . . . +3.3 V ±5%

Operating ranges define those limits between which functionality of the device is guaranteed.

DC CHARACTERISTICS (over recommended operating conditions)

Symbol	Parameter Description	Test Conditions	Min	Typ	Max	Unit
V_{IH}	Input HIGH voltage (TTL)		2.0	—	5.5	V
V_{IL}	Input LOW voltage (TTL)		0	—	0.8	V
I_{IH}	Input HIGH current (TTL)	V_{IN} =2.4 V	—	50	500	µA
I_{IL}	Input LOW current (TTL)	V_{IN} =0.5 V	—	—	-500	µA
V_{OH}	Output HIGH voltage (TTL)	I_{OH} = -1.0 mA	2.4	—	—	V
V_{OL}	Output LOW voltage (TTL)	I_{OL} = +1.0 mA	—	—	0.5	V
ΔV_{OUT75}	TX Output differential peak-to-peak voltage swing	75 Ω to V_{DD} – 2.0 V	1200	—	2200	mVp-p
ΔV_{OUT50}	TX Output differential peak-to-peak voltage swing	50 Ω to V_{DD} – 2.0 V	1200	—	2200	mVp-p
ΔV_{IN}	Receiver differential peak-to-peak Input Sensitivity RX	Internally biased to V_{DD}/2	400	—	3200	mVp-p
I_{DD}	Supply Current	Outputs open, V_{DD} = V_{DD} max	—	210	290	mA
P_D	Power dissipation	Outputs open, V_{DD} = V_{DD} max	—	700	1000	mW

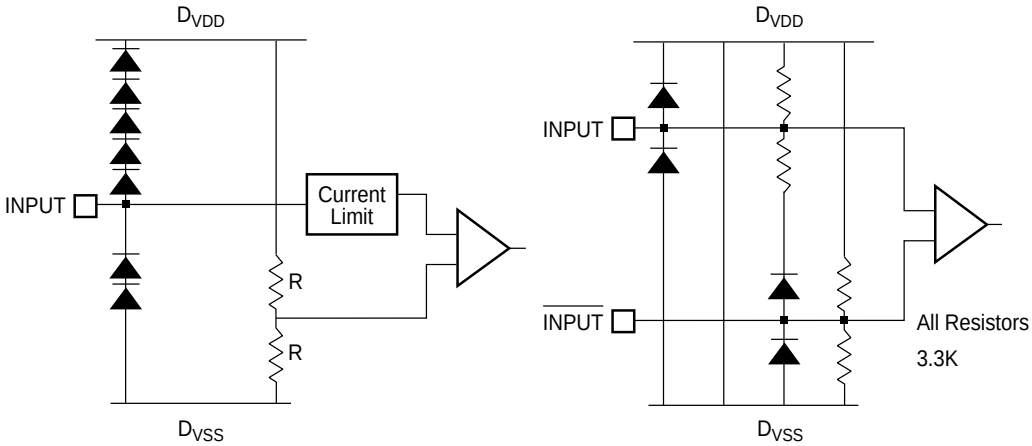

REFCLK and TTL Inputs

A

High Speed Differential Input (RX±)

B

21560A-6

Figure 20. Input Structures

KEY TO SWITCHING WAVEFORMS

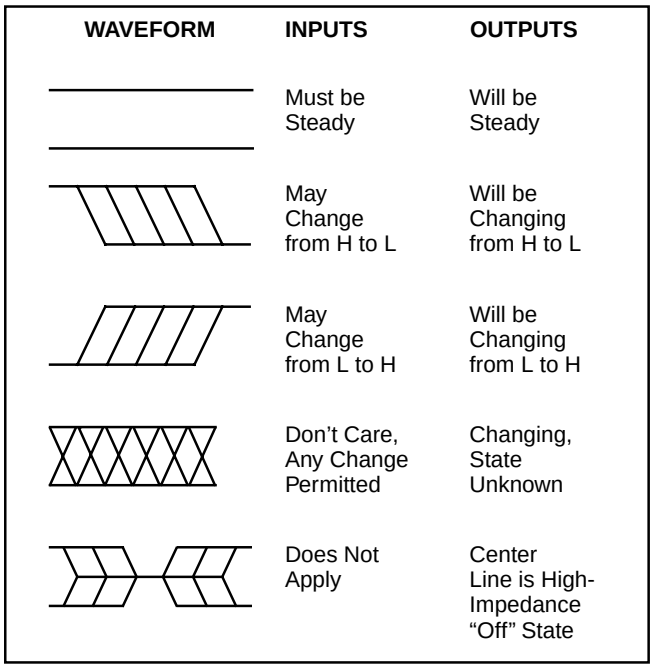

AC CHARACTERISTICS

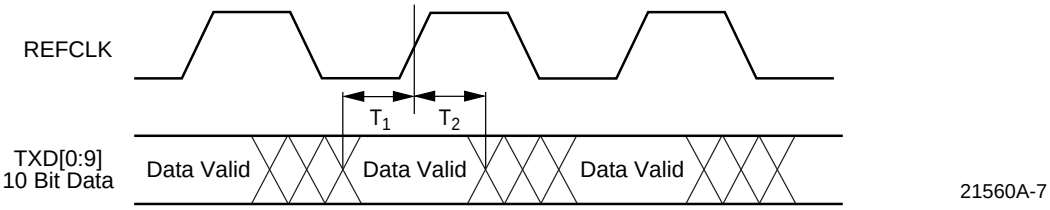

Figure 21. Transmit Timing Waveforms

Table 21. Transmit AC Characteristics

Symbol	Parameter Description	Test Conditions	Min	Max	Unit
T_1	TXD[0:9] Setup time to the rising edge of REFCLK	Measured between the valid data level of TXD[0:9] to the 1.4 V point of REFCLK	1.5	—	ns
T_2	TXD[0:9] hold time after the rising edge of REFCLK		1.0	—	ns
T_{SDR},T_{SDF}	TX± rise and fall time	20% to 80%, 75 Ω load to V_{SS}, Tested on a sample basis	—	300	ps
T_{LAT}	Latency from rising edge of REFCLK to TXD0 appearing on TX±-	bc = Bit clocks ns = Nano second	11bc - 1ns	—	—

AC CHARACTERISTICS (Continued)

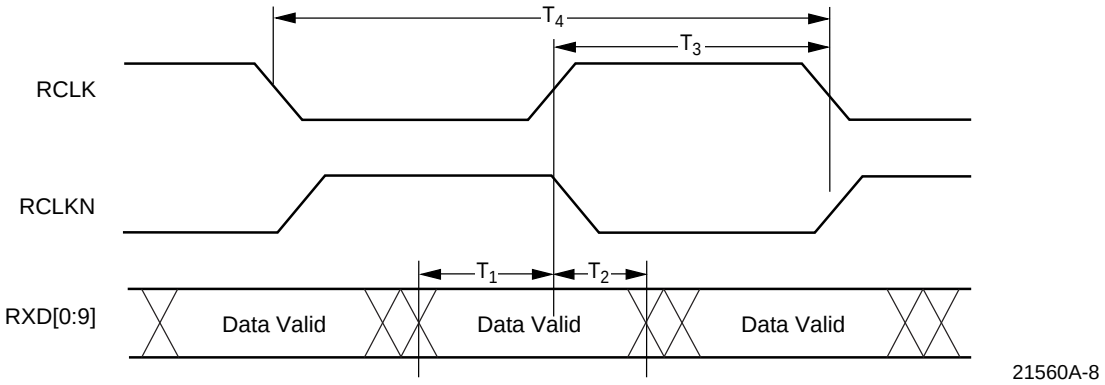

Figure 22. Receive Timing Waveform

Table 22. Receive AC Characteristics

Symbol	Parameter Description	Test Conditions	Min	Max	Unit
T_1	Data or COM_DET Valid prior to RCLK/RCLKN rise	Measured between the 1.4 V point of RCLK or RCLKN and a valid level of RXD[0:9]. All outputs driving 10 pF load.	3.0	—	ns
T_2	Data or COM_DET Valid after RCLK or RCLKN rise		2.0	—	ns
T_3	Deviation of RCLK rising edge to RCLKN rising edge delay from nominal. $delay = \frac{f_{baud}}{10} \pm T_3$	Nominal delay is 10 bit times. Tested on sample basis	-500	500	ps
T_4	Deviation of RCLK, RCLKN frequency from nominal. $f_{RCLK} = \frac{f_{REFCLK}}{2} \pm T_4$	Whether or not locked to serial data	-1.0	1.0	%
T_R, T_F	RXD[0:9], COM_DET, RCLK, RCLKN rise and fall time	Between $V_{IL(MAX)}$ and $V_{IH(MIN)}$, into 10 pf load.	—	2.4	ns
R_{lat}	Latency from RX± to RXD[0:9]	bc = Bit clock ns = Nano second	15 bc + 2 ns	34 bc + 2 ns	—
T_{LOCK}	Data acquisition lock time @ 1.25 Gbps	8B/10B IDLE pattern. Tested on a sample basis	—	2.0	µs
Receive Data Jitter	Receive Data Jitter Power $\int_{100KHz}^{\frac{1}{2 \times BitTime}} PhaseNoise$	dBc, RMS for 10^{-12} Bit Error Ratio Tested on a sample basis	—	40	ps

REFERENCE CLOCK REQUIREMENTS

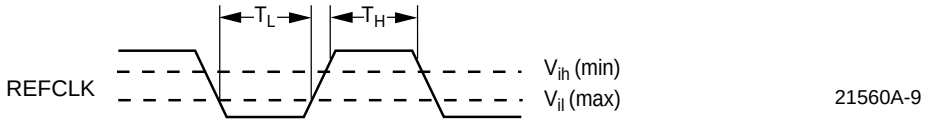

Figure 23. REFCLK Timing Waveform

Table 23. Reference Clock Requirements

Symbol	Parameter Description	Test Conditions	Min	Max	Units
FR	Frequency Range	Range over which both transmit and receive reference clocks on any link may be centered	123	127	MHz
FO	Frequency Offset	Maximum frequency offset between transmit and receive reference clocks on one link	-200	200	ppm
DC	REFCLK duty cycle	Measured at 1.5 V	30	70	%
T_{RCR},T_{RCF}	REFCLK rise and fall time	Between $V_{IL(MAX)}$ and $V_{IH(MIN)}$	—	1.0	ns

MEASUREMENTS

Serial Input Rise and Fall Time

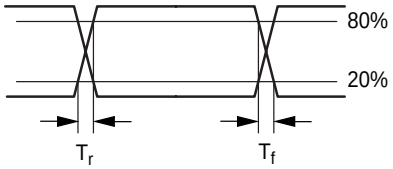

TTL Input and Output Rise and Fall Time

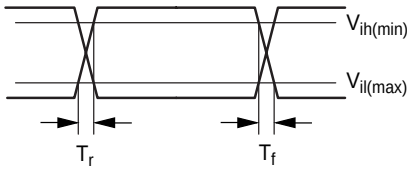

Receiver Input Eye Diagram Jitter Tolerance Task Mask

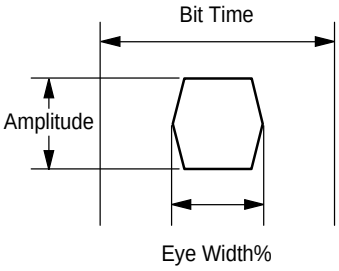

Parametric Test Load Circuit

Serial Output Load

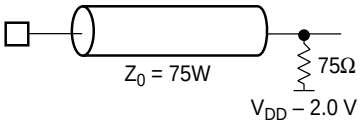

TTL AC Output Load

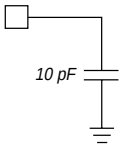

21560A-10

Figure 24. Parametric Measurement Information

MEASUREMENTS (Continued)

Random Jitter Measurement

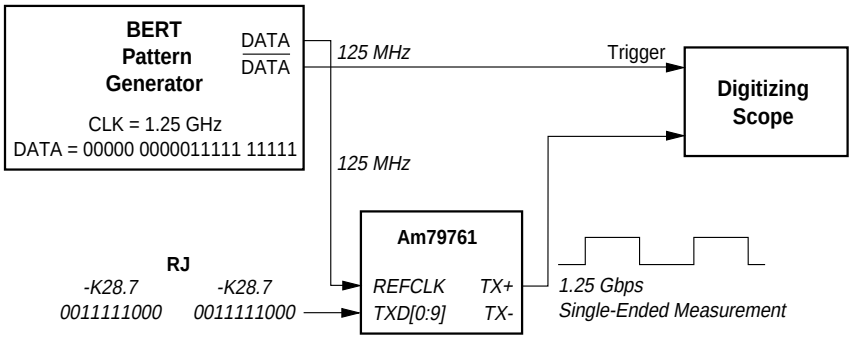

Random jitter (RJ) measurements performed according to Fibre Channel 4.3 Annex A, Test Methods, Section A.4.4. Measure standard deviation of all 50% crossing points. Peak to peak RJ is ±7 sigma of distribution.

Deterministic Jitter Measurement

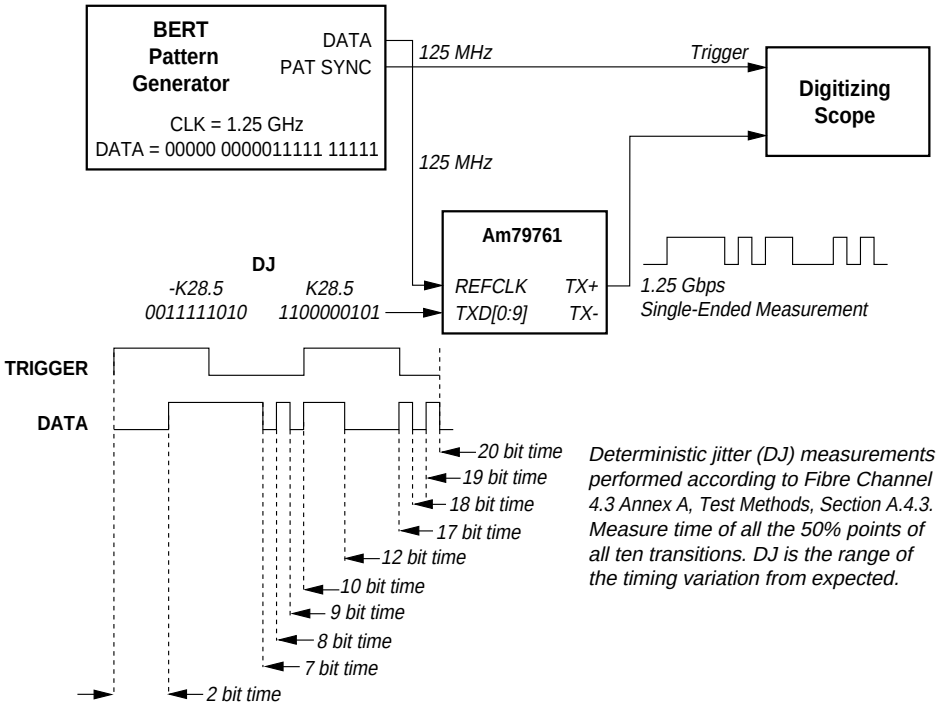

Figure 25. Transmitter Jitter Measurement Method

Transmitter Output Jitter Allocation					
T_{rj}	Serial data output random jitter (RMS)	RMS, tested on a sample basis (refer to Figure 8)	—	20	ps
T_{DJ}	Serial data output deterministic jitter (p-p)	Peak to peak, tested on a sample basis (refer to Figure 8)	—	100	ps

THERMAL CONSIDERATIONS

The Am79761 is packaged in a 14-mm or a 10-mm conventional PQFP with an internal heat spreader. These packages use an industry-standard EIAJ footprint, but have been enhanced to improve thermal dissipation. The construction of the packages are as shown in Figure 26.

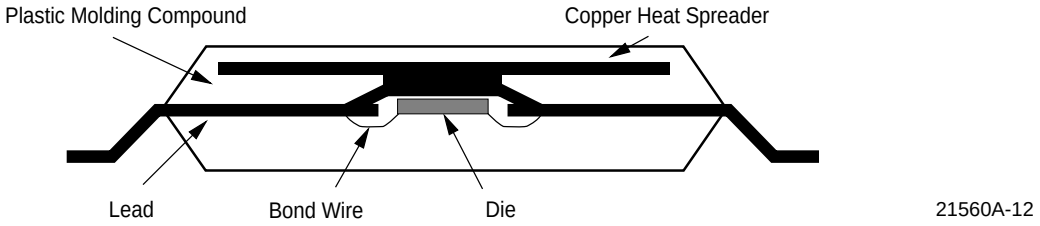

Figure 26. Package Cross Section

Table 24. Thermal Resistance

Symbol	Description	10 mm Value	14 mm Value	Units
θ_{jc}	Thermal resistance from junction to case	10.0	9.5	^{o}C/W
θ_{ca}	Thermal resistance from case to ambient in still air including conduction through the leads.	50.8	29	^{o}C/W
$\theta_{ca\text{-}100}$	Thermal resistance from case to ambient with 100 LFM airflow	41.2	26.1	^{o}C/W
$\theta_{ca\text{-}200}$	Thermal resistance from case to ambient with 200 LFM airflow	36.9	23.8	^{o}C/W
$\theta_{ca\text{-}400}$	Thermal resistance from case to ambient with 400 LFM airflow	31.8	20.5	^{o}C/W
$\theta_{ca\text{-}600}$	Thermal resistance from case to ambient with 600 LFM airflow	27.8	17.9	^{o}C/W

The Am79761 is designed to operate with a junction temperature up to 105°C. The user must guarantee that the temperature specification is not violated. With the Thermal Resistances shown above, the 10x10 PQFP can operate in still air ambient temperatures of 50°C, while the 14x14 PQFP can operate in still air ambient temperatures of 72°C. If the ambient air temperature exceeds these limits then some form of cooling through a heatsink or an increase in airflow must be provided.

Notes:

1. 50°C=110°C-1W(10°C/W+50.8^{o}C/W)*

2. 72°C=110°C-1W(95°C/W+29°C/W)*

PHYSICAL DIMENSIONS

PDH064

64-Pin (measured in millimeters)

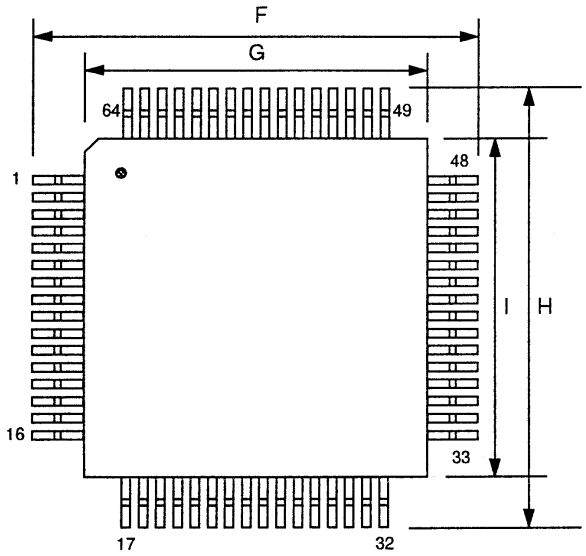

Item	10 mm	14 mm	Tol.
A	2.45	2.45	MAX
D	2.00	2.00	+0.10
E	0.30	0.35	±.05
F	13.20	17.20	±.25
G	10.00	14.00	±.10
H	13.20	17.20	±.25
I	10.00	14.00	±.10
J	0.88	0.80	±.15
K	0.50	0.80	BASIC

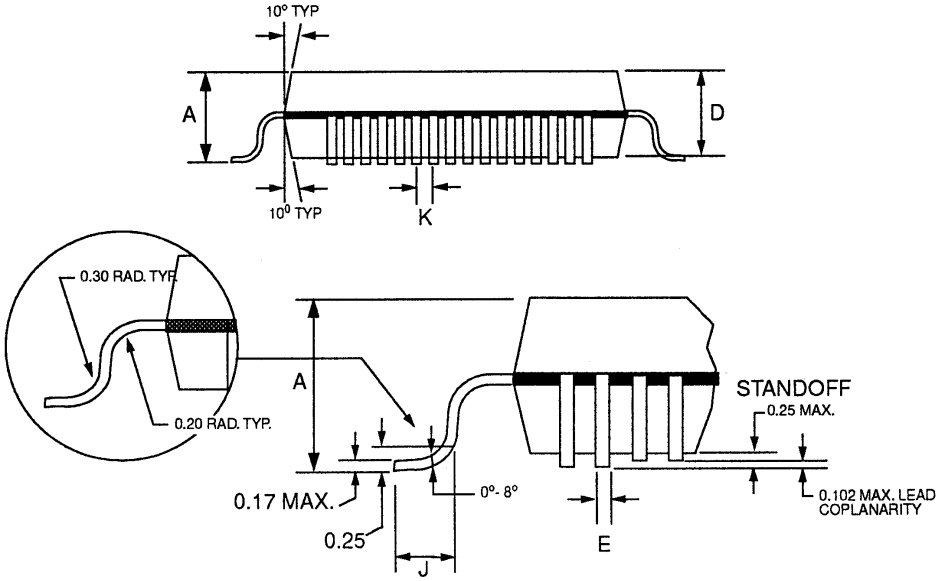

Drawing not to scale.
All units in mm unless otherwise noted.

Trademarks

Copyright © 1998 Advanced Micro Devices, Inc. All rights reserved.

AMD, the AMD logo, and combinations thereof are trademarks of Advanced Micro Devices, Inc.

GigaPHY is a trademark of Advanced Micro Devices, Inc.

Product names used in this publication are for identification purposes only and may be trademarks of their respective companies.

НИОКР СИСТЕМС

ООО «НИОКРсистемс» - это оперативные поставки широкого спектра электронных компонентов отечественного и импортного производства напрямую от производителей и с крупнейших мировых складов. Реализуемая нашей компанией продукция насчитывает более полумиллиона наименований.

Благодаря этому наша компания предлагает к поставке практически не ограниченный ассортимент компонентов как оптовыми, мелкооптовыми партиями, так и в розницу.

Благодаря развитой сети поставщиков, помогаем в поиске и приобретении экзотичных или снятых с производства компонентов.

Наша компания это:

- Гарантия качества поставляемой продукции
- Широкий ассортимент
- Минимальные сроки поставок
- Техническая поддержка
- Подбор комплектации
- Индивидуальный подход
- Гибкое ценообразование
- Работаем по 275 ФЗ

ООО «НИОКР СИТЕМС»
Москва, 125362, Россия, ул. Вишневая, д. 9, к. 1, Блок 104 а и 104 в

Телефон: 8 (495) 268-14-82
Email: n@nsistems.ru

ИНН: 7735154786
ОГРН: 1167746717709