Power Inductors – RFB Series

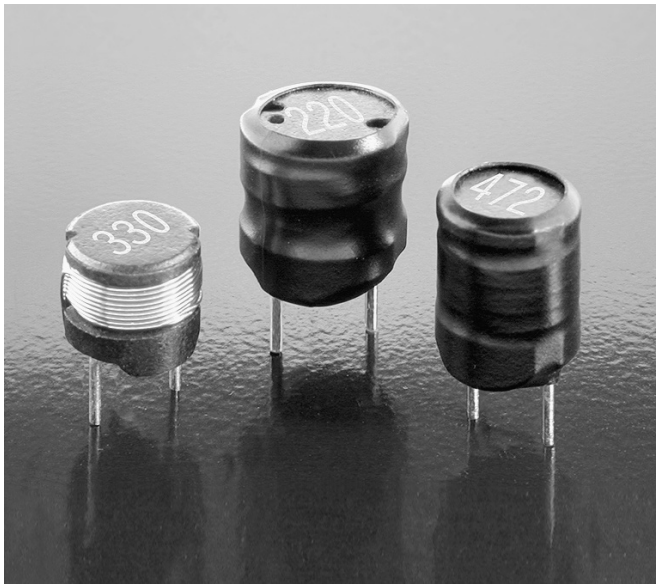

- Low cost, high current power inductors
- 2.2 µH to 18 mH inductance range
- RFB0810 and RFB1010 have a flame retardant polyolefin wrap to protect the winding.

Core material Ferrite

Terminations Tin-silver over tin over copper over steel. Other terminations available at additional cost.

Ambient temperature –40°C to +85°C with Irms current, +85°C to +125°C with derated current

Storage temperature Component: –40°C to +85°C.
Tray packaging: –40°C to +80°C

Moisture Sensitivity Level (MSL) 1 (unlimited floor life at <30°C / 85% relative humidity)

Failures in Time (FIT) / Mean Time Between Failures (MTBF)
38 per billion hours / 26,315,789 hours, calculated per Telcordia SR-332

Packaging 150 parts per tray; optional fanfold tape for RFB0807 and RFB0810

PCB washing Tested with pure water or alcohol only. For other solvents, see Doc787_PCB_Washing.pdf

RFB0807

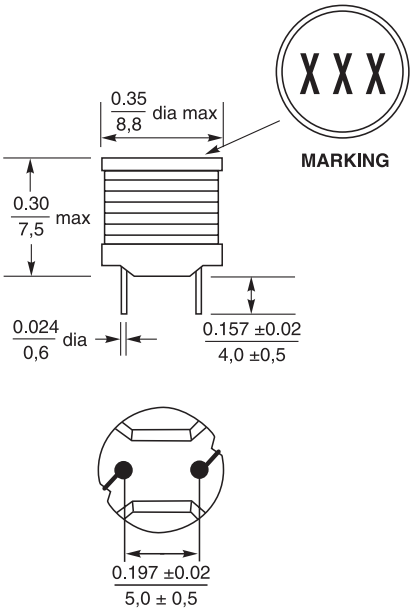

Weight: 1.22 – 1.46 g

RFB0810

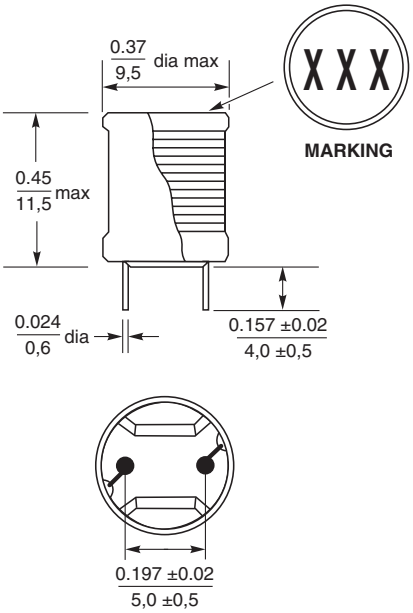

Weight: 1.97 – 2.25 g

RFB1010

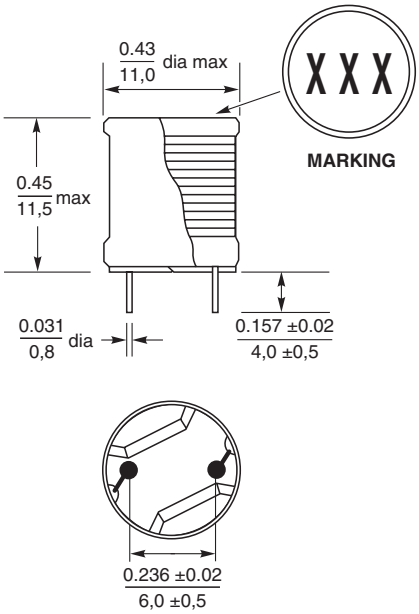

Weight: 3.04 – 3.32 g

Coilcraft®
www.coilcraft.com

US +1-847-639-6400 sales@coilcraft.com
UK +44-1236-730595 sales@coilcraft-europe.com
Taiwan +886-2-2264 3646 sales@coilcraft.com.tw
China +86-21-6218 8074 sales@coilcraft.com.cn
Singapore + 65-6484 8412 sales@coilcraft.com.sg

© Coilcraft Inc. 2013
This product may not be used in medical or high risk applications without prior Coilcraft approval. Specification subject to change without notice. Please check web site for latest information.

Power Inductors – RFB0807 Series

Part number[1]	Inductance[2]	DCR max (Ohms)	SRF typ[3] (MHz)	Isat[4] (A)	Irms (A)[5] 20°C rise	Irms (A)[5] 40°C rise
RFB0807-2R2L	2.2 µH ±20%	0.012	80	6.00	5.00	7.50
RFB0807-2R7L	2.7 µH ±20%	0.014	40	5.50	4.60	6.54
RFB0807-3R3L	3.3 µH ±20%	0.017	40	5.00	4.20	5.97
RFB0807-3R9L	3.9 µH ±20%	0.020	40	4.50	3.70	5.26
RFB0807-4R7L	4.7 µH ±20%	0.024	40	4.20	3.50	4.98
RFB0807-5R6L	5.6 µH ±20%	0.028	40	4.00	3.40	4.83
RFB0807-6R8L	6.8 µH ±20%	0.033	30	3.60	3.20	4.55
RFB0807-8R2L	8.2 µH ±20%	0.035	30	3.30	3.00	4.27
RFB0807-100L	10 µH ±10%	0.040	30	3.10	3.00	4.20
RFB0807-120L	12 µH ±10%	0.050	30	2.80	2.50	3.56
RFB0807-150L	15 µH ±10%	0.065	25	2.50	2.25	3.20
RFB0807-180L	18 µH ±10%	0.078	20	2.30	2.07	2.94
RFB0807-220L	22 µH ±10%	0.100	20	2.10	1.90	2.70
RFB0807-270L	27 µH ±10%	0.110	17	1.90	1.70	2.42
RFB0807-330L	33 µH ±10%	0.120	15	1.70	1.50	2.13
RFB0807-390L	39 µH ±10%	0.160	13	1.60	1.45	2.06
RFB0807-470L	47 µH ±10%	0.190	12	1.45	1.30	1.85
RFB0807-560L	56 µH ±10%	0.210	11	1.30	1.20	1.71
RFB0807-680L	68 µH ±10%	0.280	10	1.20	1.10	1.56
RFB0807-820L	82 µH ±10%	0.330	9	1.10	1.00	1.42
RFB0807-101L	100 µH ±10%	0.400	8	1.00	0.90	1.30
RFB0807-121L	120 µH ±10%	0.450	7	0.90	0.80	1.14
RFB0807-151L	150 µH ±10%	0.510	6	0.80	0.72	1.02
RFB0807-181L	180 µH ±10%	0.700	5	0.70	0.63	0.90
RFB0807-221L	220 µH ±10%	0.800	5	0.65	0.60	0.85
RFB0807-271L	270 µH ±10%	0.900	4.5	0.60	0.55	0.78
RFB0807-331L	330 µH ±10%	1.16	4.5	0.55	0.50	0.71
RFB0807-391L	390 µH ±10%	1.31	3.5	0.45	0.40	0.57
RFB0807-471L	470 µH ±10%	1.75	2.9	0.40	0.36	0.51
RFB0807-561L	560 µH ±10%	1.95	2.7	0.38	0.35	0.50
RFB0807-681L	680 µH ±10%	2.20	2.6	0.35	0.31	0.44
RFB0807-821L	820 µH ±10%	3.00	2.6	0.32	0.29	0.41
RFB0807-102L	1.0 mH ±10%	3.40	2.6	0.30	0.25	0.40
RFB0807-122L	1.2 mH ±10%	4.50	2.3	0.28	0.24	0.34
RFB0807-152L	1.5 mH ±10%	5.20	2.1	0.25	0.21	0.30
RFB0807-182L	1.8 mH ±10%	5.80	1.8	0.22	0.20	0.28
RFB0807-222L	2.2 mH ±10%	8.00	1.5	0.20	0.18	0.26
RFB0807-272L	2.7 mH ±10%	8.90	1.2	0.18	0.17	0.24
RFB0807-332L	3.3 mH ±10%	11.8	1.1	0.15	0.14	0.19
RFB0807-392L	3.9 mH ±10%	13.1	1.0	0.12	0.11	0.16
RFB0807-472L	4.7 mH ±10%	17.6	1.0	0.10	0.10	0.15
RFB0807-562L	5.6 mH ±10%	19.6	0.9	0.10	0.10	0.15
RFB0807-682L	6.8 mH ±10%	27	0.8	0.10	0.10	0.14
RFB0807-822L	8.2 mH ±10%	30	0.7	0.10	0.10	0.14
RFB0807-103L	10 mH ±10%	34	0.7	0.10	0.10	0.13
RFB0807-123L	12 mH ±10%	46	0.6	0.08	0.10	0.13
RFB0807-153L	15 mH ±10%	53	0.5	0.06	0.08	0.11
RFB0807-183L	18 mH ±10%	56	0.5	0.05	0.08	0.10

Typical L vs Current

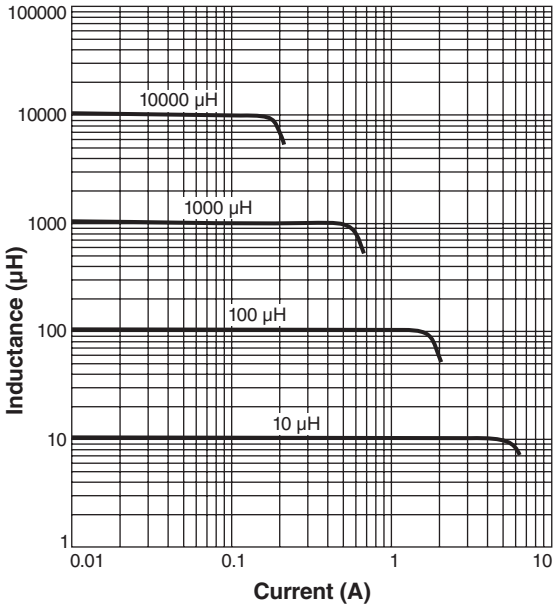

Typical L vs Frequency

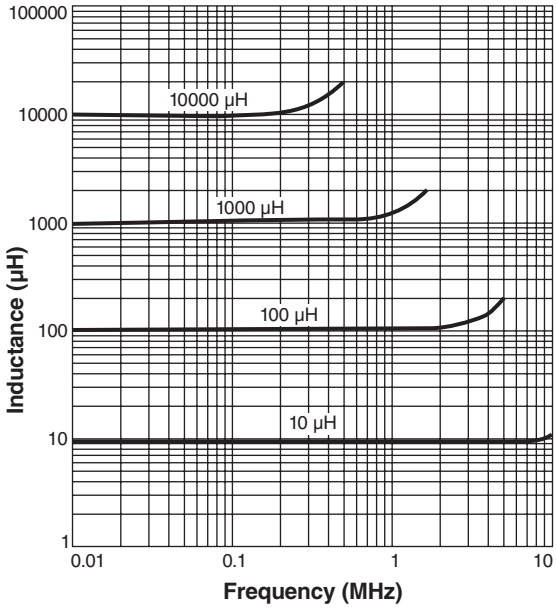

1. When ordering, please specify **termination** code:

   RFB0807-183L

   Termination: L = Tin-silver over tin over copper over steel.
   Special order: **T** = RoHS tin-silver-copper (95.5/4/0.5)
   or **S** = non-RoHS tin-lead (63/37).

   To order parts packaged in fanfold tape (800 parts per box), add the letter "F" at the end of the part number.
2. Inductance tested at 100 kHz, 0.1 Vrms, 0 Adc on an Agilent/HP 4284A LCR-meter or equivalent.
3. SRF measured using Agilent/HP 4191A or equivalent.
4. DC current at which the inductance drops 10% (typ) from its value without current.
5. Current that causes the specified temperature rise from 25°C ambient.
6. Electrical specifications at 25°C.

Coilcraft®
www.coilcraft.com

US +1-847-639-6400 sales@coilcraft.com
UK +44-1236-730595 sales@coilcraft-europe.com
Taiwan +886-2-2264 3646 sales@coilcraft.com.tw
China +86-21-6218 8074 sales@coilcraft.com.cn
Singapore + 65-6484 8412 sales@coilcraft.com.sg

© Coilcraft Inc. 2013
This product may not be used in medical or high risk applications without prior Coilcraft approval. Specification subject to change without notice. Please check web site for latest information.

Power Inductors – RFB0810 Series

Part number[1]	Inductance[2] ±10%	DCR max (Ohms)	SRF typ[3] (MHz)	Isat[4] (A)	Irms (A)[5] 20°C rise	Irms (A)[5] 40°C rise
RFB0810-100L	10 µH	0.030	22	4.20	4.00	5.30
RFB0810-120L	12 µH	0.035	20	3.90	3.75	5.10
RFB0810-150L	15 µH	0.040	17	3.60	3.52	4.80
RFB0810-180L	18 µH	0.040	15	3.30	3.30	4.50
RFB0810-220L	22 µH	0.050	12	2.90	3.20	4.20
RFB0810-270L	27 µH	0.055	12	2.60	2.87	3.90
RFB0810-330L	33 µH	0.075	11	2.40	2.65	3.60
RFB0810-390L	39 µH	0.085	10.3	2.20	2.44	3.30
RFB0810-470L	47 µH	0.100	9.5	2.00	2.22	3.00
RFB0810-560L	56 µH	0.120	8.6	1.80	2.00	2.70
RFB0810-680L	68 µH	0.150	7.5	1.60	1.77	2.40
RFB0810-820L	82 µH	0.190	6.6	1.50	1.54	2.10
RFB0810-101L	100 µH	0.200	5.5	1.40	1.30	1.80
RFB0810-121L	120 µH	0.240	5.3	1.20	1.22	1.70
RFB0810-151L	150 µH	0.340	4.5	1.10	1.14	1.60
RFB0810-181L	180 µH	0.360	4.4	1.00	1.06	1.50
RFB0810-221L	220 µH	0.480	4.4	0.92	0.98	1.40
RFB0810-271L	270 µH	0.550	4.0	0.84	0.90	1.30
RFB0810-331L	330 µH	0.650	3.5	0.75	0.82	1.10
RFB0810-391L	390 µH	0.850	3.0	0.70	0.85	1.00
RFB0810-471L	470 µH	1.00	2.5	0.63	0.67	0.90
RFB0810-561L	560 µH	1.10	2.3	0.58	0.59	0.80
RFB0810-681L	680 µH	1.40	2.0	0.52	0.51	0.70
RFB0810-821L	820 µH	1.90	2.0	0.48	0.43	0.60
RFB0810-102L	1.0 mH	2.20	2.0	0.43	0.35	0.50
RFB0810-122L	1.2 mH	2.80	1.6	0.40	0.33	0.47
RFB0810-152L	1.5 mH	3.20	1.3	0.35	0.31	0.45
RFB0810-182L	1.8 mH	3.60	1.3	0.32	0.29	0.42
RFB0810-222L	2.2 mH	4.80	1.3	0.29	0.27	0.39
RFB0810-272L	2.7 mH	5.60	1.2	0.26	0.25	0.36
RFB0810-332L	3.3 mH	7.60	1.0	0.24	0.23	0.33
RFB0810-392L	3.9 mH	8.90	0.9	0.22	0.21	0.31
RFB0810-472L	4.7 mH	9.60	0.9	0.20	0.20	0.28
RFB0810-562L	5.6 mH	12.0	0.8	0.18	0.18	0.25
RFB0810-682L	6.8 mH	14.0	0.7	0.16	0.16	0.23
RFB0810-822L	8.2 mH	17.5	0.6	0.15	0.14	0.20
RFB0810-103L	10 mH	21	0.6	0.13	0.12	0.17
RFB0810-123L	12 mH	28	0.5	0.12	0.11	0.15
RFB0810-153L	15 mH	32	0.5	0.11	0.10	0.14
RFB0810-183L	18 mH	36	0.4	0.10	0.09	0.12

1. When ordering, please specify **termination** code:

   RFB0810-183L

   Termination: L = Tin-silver over tin over copper over steel.
   Special order: **T** = RoHS tin-silver-copper (95.5/4/0.5)
   or **S** = non-RoHS tin-lead (63/37).

   To order parts packaged in fanfold tape (800 parts per box), add the letter "F" at the end of the part number.
2. Inductance tested at 100 kHz, 0.1 Vrms, 0 Adc on an Agilent/HP 4284A LCR-meter or equivalent.
3. SRF measured using Agilent/HP 4191A or equivalent.
4. DC current at which the inductance drops 10% (typ) from its value without current.
5. Current that causes the specified temperature rise from 25°C ambient.
6. Electrical specifications at 25°C.

Typical L vs Current

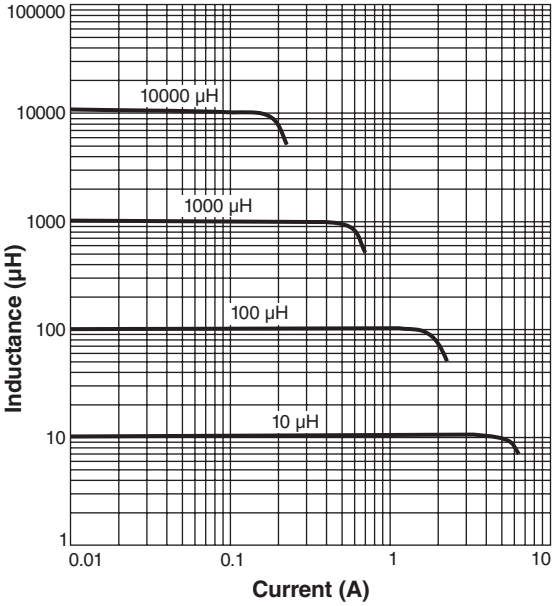

Typical L vs Frequency

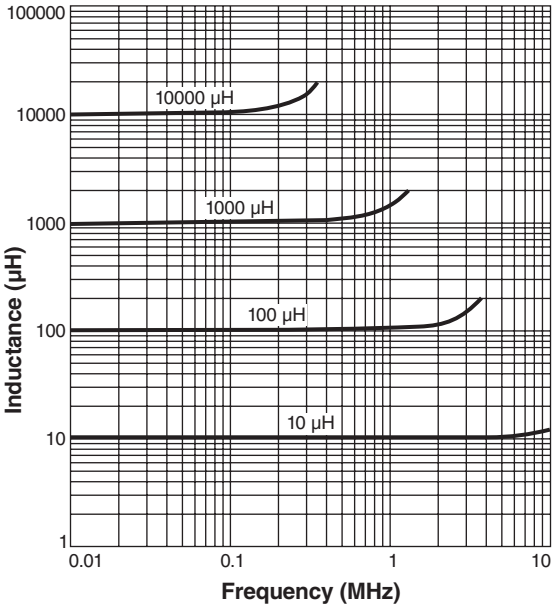

www.coilcraft.com

US +1-847-639-6400 sales@coilcraft.com
UK +44-1236-730595 sales@coilcraft-europe.com
Taiwan +886-2-2264 3646 sales@coilcraft.com.tw
China +86-21-6218 8074 sales@coilcraft.com.cn
Singapore + 65-6484 8412 sales@coilcraft.com.sg

© Coilcraft Inc. 2013
This product may not be used in medical or high risk applications without prior Coilcraft approval. Specification subject to change without notice. Please check web site for latest information.

Power Inductors – RFB1010 Series

Part number[1]	Inductance[2] ±10%	DCR max (Ohms)	SRF typ[3] (MHz)	Isat[4] (A)	Irms (A)[5] 20°C rise	Irms (A)[5] 40°C rise
RFB1010-100L	10 µH	0.023	23	6.10	4.20	6.00
RFB1010-120L	12 µH	0.025	20	5.60	4.00	5.70
RFB1010-150L	15 µH	0.028	19	5.00	3.75	5.40
RFB1010-180L	18 µH	0.030	16	4.60	3.50	5.00
RFB1010-220L	22 µH	0.042	15	4.10	3.30	4.70
RFB1010-270L	27 µH	0.046	12	3.70	3.00	4.40
RFB1010-330L	33 µH	0.055	11	3.40	2.80	4.10
RFB1010-390L	39 µH	0.075	10.3	3.10	2.60	3.80
RFB1010-470L	47 µH	0.082	9.5	2.80	2.40	3.50
RFB1010-560L	56 µH	0.090	8.6	2.60	2.20	3.20
RFB1010-680L	68 µH	0.120	7.5	2.30	2.00	2.80
RFB1010-820L	82 µH	0.140	7.0	2.10	1.90	2.50
RFB1010-101L	100 µH	0.150	7.0	1.90	1.70	2.20
RFB1010-121L	120 µH	0.210	6.0	1.75	1.60	2.10
RFB1010-151L	150 µH	0.245	5.0	1.60	1.50	1.90
RFB1010-181L	180 µH	0.30	5.0	1.45	1.40	1.80
RFB1010-221L	220 µH	0.36	4.3	1.30	1.30	1.70
RFB1010-271L	270 µH	0.49	4.0	1.20	1.20	1.60
RFB1010-331L	330 µH	0.57	3.5	1.10	1.00	1.40
RFB1010-391L	390 µH	0.62	3.0	1.00	0.90	1.30
RFB1010-471L	470 µH	0.81	3.0	0.90	0.80	1.20
RFB1010-561L	560 µH	0.92	2.3	0.80	0.70	1.05
RFB1010-681L	680 µH	1.20	2.0	0.75	0.60	0.93
RFB1010-821L	820 µH	1.35	2.0	0.68	0.55	0.80
RFB1010-102L	1.0 mH	1.45	2.0	0.60	0.50	0.67
RFB1010-122L	1.2 mH	2.10	1.6	0.55	0.47	0.63
RFB1010-152L	1.5 mH	2.40	1.4	0.50	0.44	0.59
RFB1010-182L	1.8 mH	3.50	1.3	0.45	0.41	0.55
RFB1010-222L	2.2 mH	4.10	1.3	0.41	0.38	0.50
RFB1010-272L	2.7 mH	5.20	1.2	0.37	0.35	0.47
RFB1010-332L	3.3 mH	6.00	1.0	0.34	0.32	0.43
RFB1010-392L	3.9 mH	7.00	0.9	0.31	0.29	0.39
RFB1010-472L	4.7 mH	8.50	0.8	0.28	0.25	0.35
RFB1010-562L	5.6 mH	10.0	0.8	0.26	0.23	0.30
RFB1010-682L	6.8 mH	13.0	0.7	0.23	0.19	0.26
RFB1010-822L	8.2 mH	15.8	0.6	0.21	0.16	0.22
RFB1010-103L	10 mH	19	0.6	0.19	0.13	0.18
RFB1010-123L	12 mH	22	0.5	0.17	0.12	0.17
RFB1010-153L	15 mH	29	0.5	0.16	0.11	0.15
RFB1010-183L	18 mH	33	0.4	0.14	0.10	0.13

1. When ordering, please specify **termination** code:

   RFB1010-183L

   Termination: L = Tin-silver over tin over copper over steel.
   Special order: **T** = RoHS tin-silver-copper (95.5/4/0.5) or **S** = non-RoHS tin-lead (63/37).
2. Inductance tested at 100 kHz, 0.1 Vrms, 0 Adc on an Agilent/HP 4284A LCR-meter or equivalent.
3. SRF measured using Agilent/HP 4191A or equivalent.
4. DC current at which the inductance drops 10% (typ) from its value without current.
5. Current that causes the specified temperature rise from 25°C ambient.
6. Electrical specifications at 25°C.

Typical L vs Current

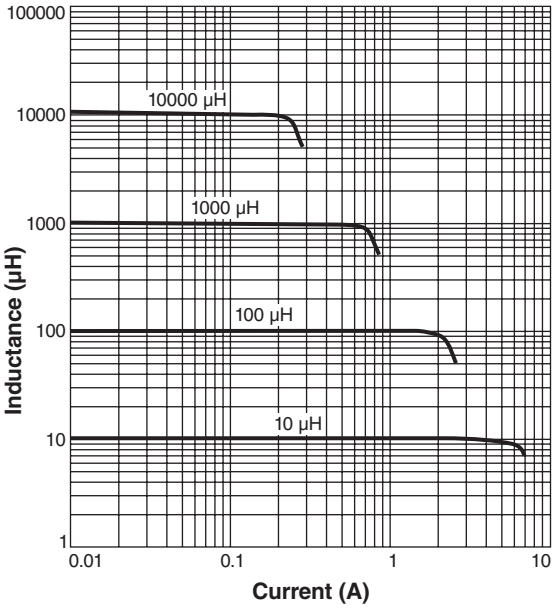

Typical L vs Frequency

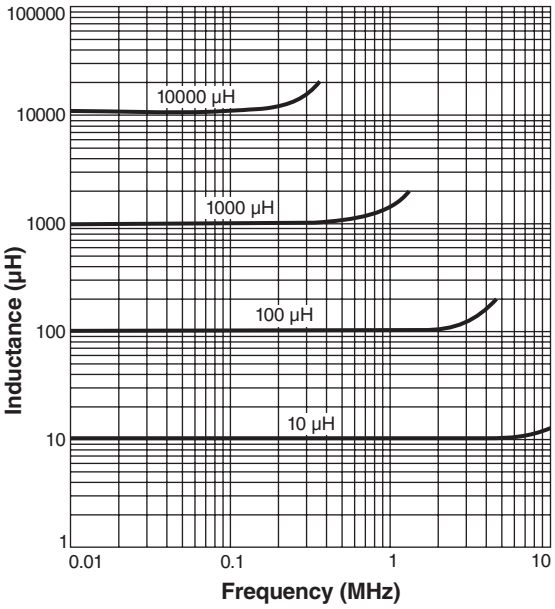

www.coilcraft.com

US +1-847-639-6400 sales@coilcraft.com
UK +44-1236-730595 sales@coilcraft-europe.com
Taiwan +886-2-2264 3646 sales@coilcraft.com.tw
China +86-21-6218 8074 sales@coilcraft.com.cn
Singapore + 65-6484 8412 sales@coilcraft.com.sg

© Coilcraft Inc. 2013
This product may not be used in medical or high risk applications without prior Coilcraft approval. Specification subject to change without notice. Please check web site for latest information.

НИОКР СИСТЕМС

ООО «НИОКРсистемс» - это оперативные поставки широкого спектра электронных компонентов отечественного и импортного производства напрямую от производителей и с крупнейших мировых складов. Реализуемая нашей компанией продукция насчитывает более полумиллиона наименований.

Благодаря этому наша компания предлагает к поставке практически не ограниченный ассортимент компонентов как оптовыми, мелкооптовыми партиями, так и в розницу.

Благодаря развитой сети поставщиков, помогаем в поиске и приобретении экзотичных или снятых с производства компонентов.

Наша компания это:

- Гарантия качества поставляемой продукции
- Широкий ассортимент
- Минимальные сроки поставок
- Техническая поддержка
- Подбор комплектации
- Индивидуальный подход
- Гибкое ценообразование
- Работаем по 275 ФЗ

ООО «НИОКР СИТЕМС»
Москва, 125362, Россия, ул. Вишневая, д. 9, к. 1, Блок 104 а и 104 в

Телефон: 8 (495) 268-14-82
Email: n@nsistems.ru

ИНН: 7735154786
ОГРН: 1167746717709