250 Series

‘Thin’ Stackohm®
Vitreous Enamel Power

When limited space is a consideration, choose Ohmite’s “thin” stackable 250 Type resistors. These oval-shaped ceramic-core resistors feature a low profile to permit installation in spaces with height restrictions. They are also equipped with integral mounting brackets so they can be fastened to a chassis and stacked in locations with limited surface area.

When properly fastened, the mounting brackets add a heat sinking benefit resulting in a smaller size per watt. Durable 250 Type resistors are fully welded and coated with lead free vitreous enamel.

FEATURES

- Small size-to-power ratio.
- Stackable
- Integral mounting bracket conducts heat to mounting surface.
- Low profile for use in equipment where space is limited.
- All-welded construction.
- RoHS compliant product available. Add “E” suffix to part number to specify.

SERIES SPECIFICATIONS

Series	Wattage	Ohms	Max. Voltage*
F10	10	1.0-15K	187
F20	20	1.0-50K	815
F30	30	1.0-10K	281
F40	40	1.0-25K	655
F55	55	1.0-30K	1405

Adjustable versions and other sizes available; Consult Ohmite Also available in low cost Centohm or Silicone coating; Consult Ohmite.

* Maximum Voltage is based on Ohm’s Law [$V=\sqrt{P*R}$] as limited by the resistance value of specified product

CHARACTERISTICS

Coating	Lead free vitreous enamel
Core	Ceramic
Terminals	Tinned lug with hole. RoHS solder composition is 96% Sn, 3.5% Ag, 0.5% Cu
Derating	Linearly from 100% @ +25°C to 0% @ +350°C
Tolerance	±5% (J)
Power rating	Based on mounting a single resistor on a metal surface measuring 10” (254mm) square by 0.04” (1.016mm) thick. Reduce rating by 15% when mounting on non-metallic surface
Overload	10x rated wattage for 5 seconds if max. voltage is not exceeded
Temperature coefficient	1 to 20Ω: ±400 ppm/°C Over 20Ω: ±260 ppm/°C
Dielectric withstanding voltage	500 VAC: 10 and 20 watt rating. 1000 VAC: 30, 40 and 55 watt rating (measured from lug to mounting bracket)
Max. amps	To calculate, use the formula $\sqrt{P/R}$

250 Series

‘Thin’ Stackohm®
Vitreous Enamel Power

DIMENSIONS

(in. / *mm*)

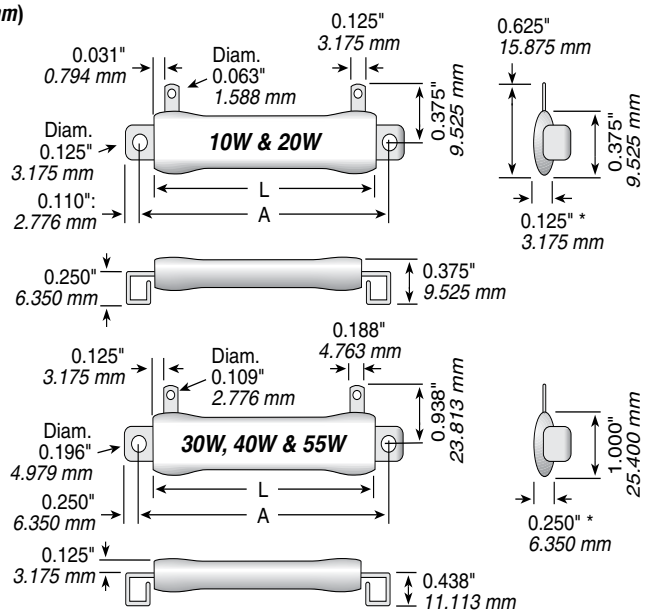

Series	Wattage	Length L	Length A
F10	10	0.750 / 19.050	1.000 / 25.400
F20	20	2.000 / 50.800	2.313 / 58.750
F30	30	1.250 / 31.750	2.000 / 50.800
F40	40	2.000 / 50.800	2.750 / 69.850
F55	55	3.500 / 88.900	4.250 / 107.950

*Reference dimension only; varies according to resistance value.

Note: When resistors are stacked, use washers or spacers as required to insure clearance and improve power dissipation.

MOUNTING

In addition to the standard box bracket, stud type brackets are available for stacking the standard size resistors. Stud type brackets are available in two heights: standard (SS, 0.437”/11.113mm) and high (SSH, 0.531”/13.494mm). The SSH stud is recommended when stacking the adjustable Type 260, as it assures clearance for the adjustable lugs to pass eachother. Spacer washer No. 6027 (O.D. 0.219”/5.556mm, I.D. 0.125”/3.175mm, thickness 0.094”/2.381mm) is recommended for use with the miniature adjustable and fixed resistors to provide clearance, as explained above, or increased wattage. See chart.

Derating for stacked mounting

Stacked resistors should be derated to prevent excessive temperatures due to proximity. Approximate ratings are given in the table.

	Percent of Single Unit Rating		
No. of Resistors	Std. or Inter.	Miniature	Miniature with 0.094” (2.381 mm) Spacer Washer
2	70	70	75
3	60	60	69
4	50	50	60

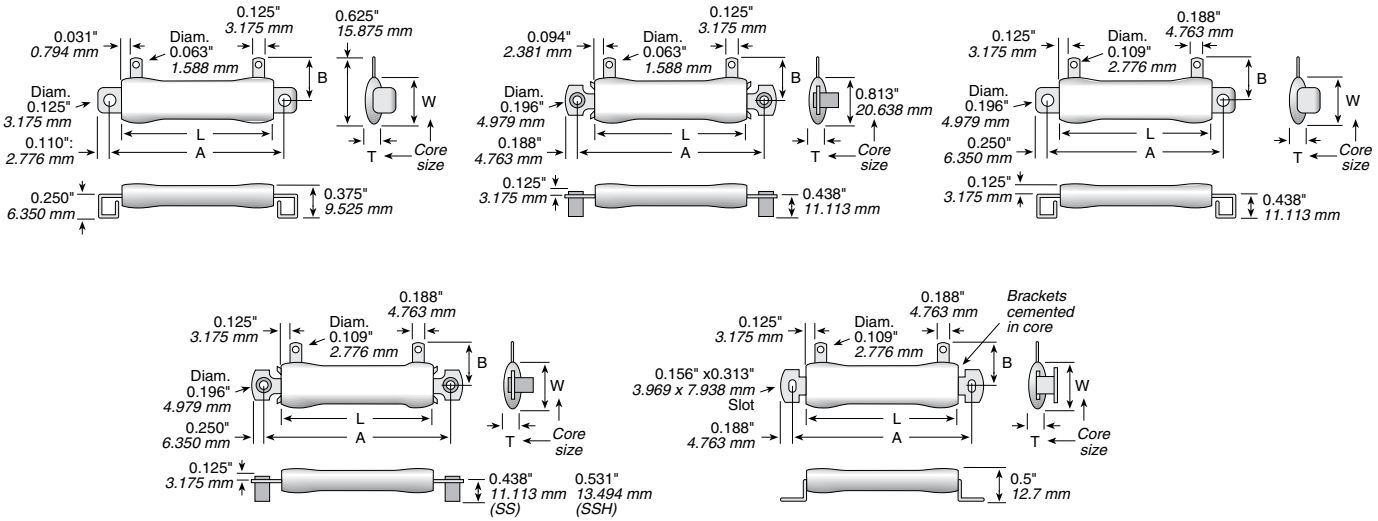

(continued)

250 Series

‘Thin’ Stackohm®
Vitreous Enamel Power

CORE AND TERMINAL SELECTION

For Made to Order Type 250 Stackohm Resistors

Free Air Wattage Rating*	Core Dimensions† Length L	Width W	Thickness T	Min. Ohms	Max. Practical Ohms	Code for Core Dia.	Fig. No.	Dimension A	Dimension B	Standard Terminal
Miniature										
10	0.750” (19.050mm)	0.375” (9.525mm)	0.125” (3.175mm)	1	15,000	TA	1	1.000” (25.400mm)	0.375” (9.525mm)	51
15	1.000” (25.400mm)	0.375” (9.525mm)	0.125” (3.175mm)	1	25,000	TA	1	1.250” (31.750mm)	0.375” (9.525mm)	51
20	2.000” (50.800mm)	0.375” (9.525mm)	0.125” (3.175mm)	1	50,000	TA	1	2.313” (58.750mm)	0.375” (9.525mm)	51
12	0.688” (17.463mm)	0.594” (15.081mm)	0.234” (5.953mm)	1	20,000	TB	**			51
Intermediate										
21	1.000” (25.400mm)	0.813” (20.638mm)	0.250” (6.350mm)	1	8,000	TD	2	1.313” (33.350mm)	0.594” (15.081mm)	51
25	1.500” (38.100mm)	0.813” (20.638mm)	0.250” (6.350mm)	1	15,000	TD	2	1.813” (46.050mm)	0.594” (15.081mm)	51
Standard										
30	1.250” (31.750mm)	1.000” (25.400mm)	0.250” (6.350mm)	1	10,000	TE	5 3, 4	1.750” (44.450mm) 2.000” (50.800mm)	0.938” (23.813mm)	57
40	2.000” (50.800mm)	1.000” (25.400mm)	0.250” (6.350mm)	1	25,000	TE	5 3, 4	2.500” (63.500mm) 2.750” (69.850mm)	0.938” (23.813mm)	57
55	3.500” (88.900mm)	1.000” (25.400mm)	0.250” (6.350mm)	1	30,000	TE	5 3, 4	4.000” (1.1.600mm) 4.250” (107.950mm)	0.938” (23.813mm)	57
70	4.750” (120.650mm)	1.000” (25.400mm)	0.250” (6.350mm)	1	120,000‡	TE	5 3, 4	5.250” (133.350mm) 5.500” (139.700mm)	0.938” (23.813mm)	57
95	6.000” (152.400mm)	1.000” (25.400mm)	0.250” (6.350mm)	1	150,000‡	TE	5 3, 4	6.500” (165.100mm) 6.750” (171,450mm)	0.938” (23.813mm)	57

*Based on mounting on steeel panel 10” (254mm) x 10” x 0.040” (1.016mm).

†Inside dimensions of core are: 0.250” (6.350mm) x 0.047” (1.191mm) for TA; 0.406” (10.319mm) x 0.047” (1.191mm) for TB; 0.438” (11.113mm) x 0.063” (1.588mm) for TD; 0.672” (17.069mm) x 0.063” (1.588mm) for TE.

‡These sizes are Ohmicone (silicone-ceramic) coated–type 450-460.

**User supplies brackets.

ORDERING INFORMATION

Series — **RoHS Compliant**

■ F 2 0 J 1 R 0 E

Coating
Blank = Vitreous
C = Centohm
S = Silicone

Wattage

Tolerance
F = 1%
H = 3%
J = 5%
K = 10%

Ohms
1R0 = 1Ω
250 = 250Ω
1K0 = 1,000Ω
25K = 25,000Ω
25K5 = 25,500Ω

Made-to-order Parts

See web-site for custom core info

Terminal Type
See “Resistor Terminals for Tubular Cores”

Tolerance
J = 5%

RoHS Compliant

2 5 3 0 T E 5 7 B 1 R 0 0 J E

Series
Vitreous enamel:
25 = 250 Fixed
26 = 260 Adjustable
Silicone ceramic:
45 = 450 Fixed
46 = 460 Adjustable

Wattage & Core Code
See “Core and Terminal Selection”

Mounting Brackets
(user supplies bracket for core TB)
B = Stacking box
S = Stacking stud, std. height
H = Stacking stud high
U = Unit type

Ohms
Example:
1R00 = 1Ω
250R = 250Ω
1K00 = 1,000Ω
25K0 = 25,000Ω
25K5 = 25,500Ω

Standard Values

Ohmic value	Part No. Prefix ➤ Suffix ▼	Wattage 10 F10J	20 F20J	30 F30J	40 F40J	55 F55J
1	1R0E	✔	✔	✔	✔	✔
1.5	1R5E			✔	✔	✔
2	2R0E	✔	✔	✔	✔	✔
3	3R0E			✔	✔	✔
4	4R0E				✔	✔
5	5R0E	✔	✔	✔	✔	✔
7.5	7R5E	✔			✔	✔
10	10RE	✔	✔		✔	✔
15	15RE	✔	✔	✔		
20	20RE	✔				
25	25RE	✔	✔	✔	✔	✔
30	30RE	✔				
40	40RE					✔

Ohmic value	Part No. Prefix ➤ Suffix ▼	Wattage 10 F10J	20 F20J	30 F30J	40 F40J	55 F55J
50	50RE	✔		✔	✔	✔
75	75RE			✔		✔
100	100E	✔	✔	✔	✔	✔
150	150E		✔			
200	200E	✔		✔	✔	✔
250	250E		✔	✔	✔	✔
300	300E		✔			
400	400E	✔			✔	✔
500	500E	✔	✔	✔	✔	✔
750	750E			✔	✔	
800	800E		✔			
1,000	1K0E	✔	✔	✔	✔	✔
1,250	1K25E	✔	✔			

Ohmic value	Part No. Prefix ➤ Suffix ▼	Wattage 10 F10J	20 F20J	30 F30J	40 F40J	55 F55J
1,500	1K5E	✔	✔	✔		✔
2,000	2K0E		✔		✔	✔
2,500	2K5E	✔	✔	✔	✔	✔
3,000	3K0E	✔		✔	✔	✔
4,000	4K0E			✔		✔
5,000	5K0E		✔			
6,000	6K0E					
7,500	7K5E		✔			
10,000	10KE				✔	✔
15,000	15KE				✔	
20,000	20KE				✔	
25,000	25KE				✔	
40,000	40KE		✔			

✔ = Standard values; check availability at www.ohmite.com

НИОКР СИСТЕМС

ООО «НИОКРсистемс» - это оперативные поставки широкого спектра электронных компонентов отечественного и импортного производства напрямую от производителей и с крупнейших мировых складов. Реализуемая нашей компанией продукция насчитывает более полумиллиона наименований.

Благодаря этому наша компания предлагает к поставке практически не ограниченный ассортимент компонентов как оптовыми, мелкооптовыми партиями, так и в розницу.

Благодаря развитой сети поставщиков, помогаем в поиске и приобретении экзотичных или снятых с производства компонентов.

Наша компания это:

- Гарантия качества поставляемой продукции
- Широкий ассортимент
- Минимальные сроки поставок
- Техническая поддержка
- Подбор комплектации
- Индивидуальный подход
- Гибкое ценообразование
- Работаем по 275 ФЗ

ООО «НИОКР СИТЕМС»
Москва, 125362, Россия, ул. Вишневая, д. 9, к. 1, Блок 104 а и 104 в

Телефон: 8 (495) 268-14-82
Email: n@nsistems.ru

ИНН: 7735154786
ОГРН: 1167746717709