Embedded Power for
Business-Critical Continuity

DS1200

1200 Watts

Distributed Power System

Distributed Power Bulk Front-End
Total Output Power: 1200 Watts
+3.3 Vdc Stand-by Output
Wide Range Input Voltage: 90 - 264 Vac

PMBus

Special Features

- Active power factor correction
- EN61000-3-2 harmonic compliance
- Active AC inrush control
- 1U X 2U form factor
- 21.71 W / in^3
- +12 Vdc Output
- +3.3 Vdc stand-by (5 V standby - consult factory)
- No minimum load required
- Hot plug operation
- N + 1 redundant
- Internal OR'ing fets
- Active current sharing (10 - 100% load)
- Built-in cooling fan (40 mm x 28 mm)
- I^{2}C communication interface bus
- PMBus compliant
- EERPOM for FRU data
- Red/green bi-color LED status
- Internal fan speed control
- Fan Fail Tach Output Signal
- INTEL, SSI Std. logic timing
- INTEL, SSI Std. FRU data format
- Full digital control
- Two year warranty

Safety

- UL/cUL 60950 (UL Recognized)
- NEMKO+ CB Report EN60950
- EN60950
- CE Mark
- China CCC

Electrical Specifications

Input	
Input range:	180 - 264 (1200 W) 90 - 264 (1000 W)
Frequency:	47-63 Hz, single phase AC
Inrush current:	40 Apk maximum inrush current
Efficiency:	> 91% typical at high line 50% load
Conducted EMI:	FCC Subpart J EN55022 Class B
Radiated EMI:	FCC Subpart J EN55022 Class B
Power factor:	0.99 typical
Leakage current:	1.40 mA @ 240 VAC
Hold up time:	12 ms minimum
Output	
Main DC voltage:	+12 V @ 100 A (high line) +12 V @ 81.6 A (low line)
Stand-By:	+3.3 Vsb @ 6 A (5 V @ 4 A available)
Adjustment range:	±5% on +12V only using I^{2}C
Regulation:	+12 Vdc; +5% / -5% +3.3 Vsb; +5% / -5%
Over current:	+12 Vdc; latches off if overcurrent lasts over 1 second, otherwise it is auto recovery (See Table 1 next page) +3.3 Vsb, 9 A max (hiccup mode)
Over voltage:	+12 Vdc; 13.2 - 14.4 Vdc +3.3 Vsb; 3.76 - 4.30 Vdc
Under voltage:	+12 Vdc; 9 - 10.8 V (latch off)
Turn-on delay:	2 second max, 5 - 50 mS, monotonic rise
Main output rise time:	5 - 50 mS, monotonic rise

EMERSON
Network Power

Logic Control	
PS_SEATED (A4):	TTL logic LOW if power supply is seated into system connector. This is a short pin. A logic HIGH if the PSU is removed
PWR GOOD (C3):	Active TTL high when output is within regulation limits.
AC OK (B1):	A low logic level if the input voltage is within allowable limits. A TTL logic HIGH level, and a 5mS early warning signal before 12.0 V DC output loss of regulation.
PS_INHIBIT/PS_KILL (B4):	When left open power supply operation will be inhibited. When the power supply is inserted into the system, this pin will be pull low by the system and turn the power supply on only after all other power supply pins have seated.
PS ON (A1):	The output will be enabled when this signal is pulled low, below 0.8 V outputs disabled when pin is driven high or left open.

Environmental Specifications

Operating temperature:	-10° to 50 °C
Storage temperature:	-40 °C to +85 °C
Altitude, operating:	10,000 ft
Electromagnetic susceptibility / Input transients:	-EN61000-3-2, -3-3 -EN61000-4-2, 4.3, 4-4, -4-5, 4-11 Level -EN55024:1998
RoHS & lead-free compliant:	No tantalum caps.
Humidity:	20 to 90% RH, non-condensing
Shock and vibration specificatons:	Complies with Astec Std. Specifications, Q3205
MTBF (Demonstrated):	500K Hrs at full load, 40 °C

Ordering Information

Model Number	Nominal Output Voltage Set Point	Set Point Tolerance	Total Regulation	Minimum Current	Maximum Current	Output Ripple P/P	Over Current	Stand-by	Air Flow
DS1200-3	12.0 Vdc	±0.2%	±5%	0 A	100 A	120 mV	118 A - 147.6 A*	3.3 V @ 6 A	STD
DS1200-3-002	12.0 Vdc	±0.2%	±5%	0 A	100 A	120 mV	118 A - 147.6 A*	5.0 V @ 4 A	STD
DS1200-3-003**	12.0 Vdc	±0.2%	±5%	0 A	100 A	120 mV	118 A - 147.6 A*	3.3 V @ 6 A	REV†
DS1200-3-004**	12.0 Vdc	±0.2%	±5%	0 A	100 A	120 mV	118 A - 147.6 A*	5.0 V @ 4 A	REV†

*Over current latches off if overcurrent lasts over 1 seconds, otherwise it is auto recovery.
**Release in April 2010
† Derating may apply.

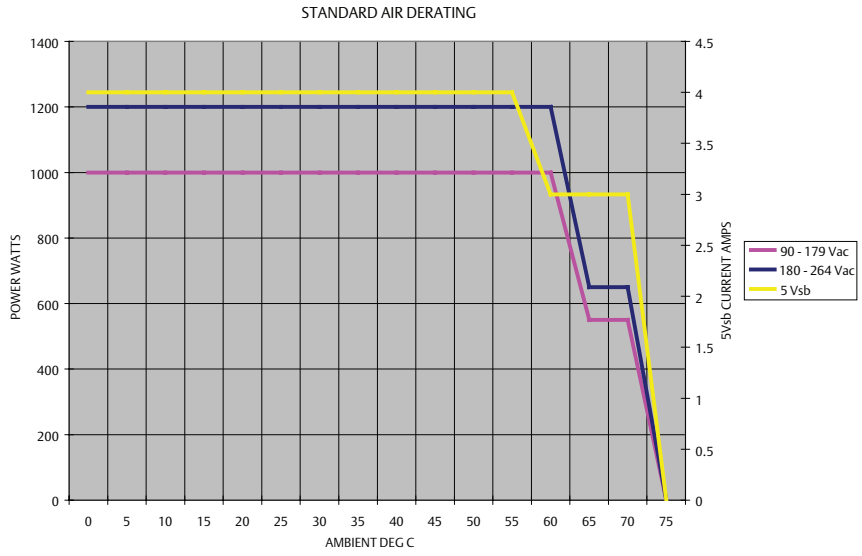

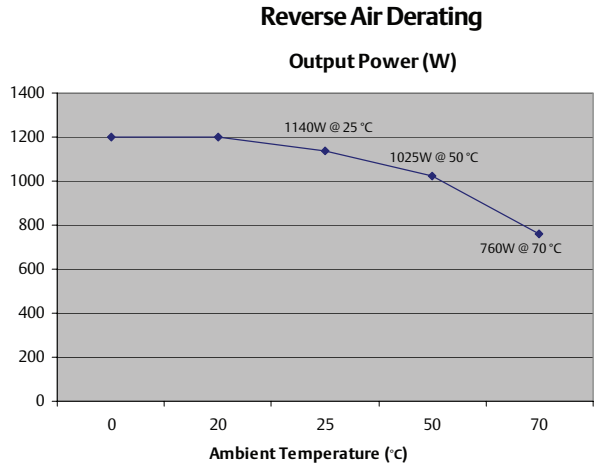

Mechanical Drawing

Condition	LED Status
Stand-by - ON; Main output - OFF; AC PRESENT	Blinking green
Stand-by - ON; Main output - ON;	Solid green
Main output OCP, UVP, OVP	Blinking Amber
FAN_FAULT; OTP; Stand-by OCP/UVP	Amber

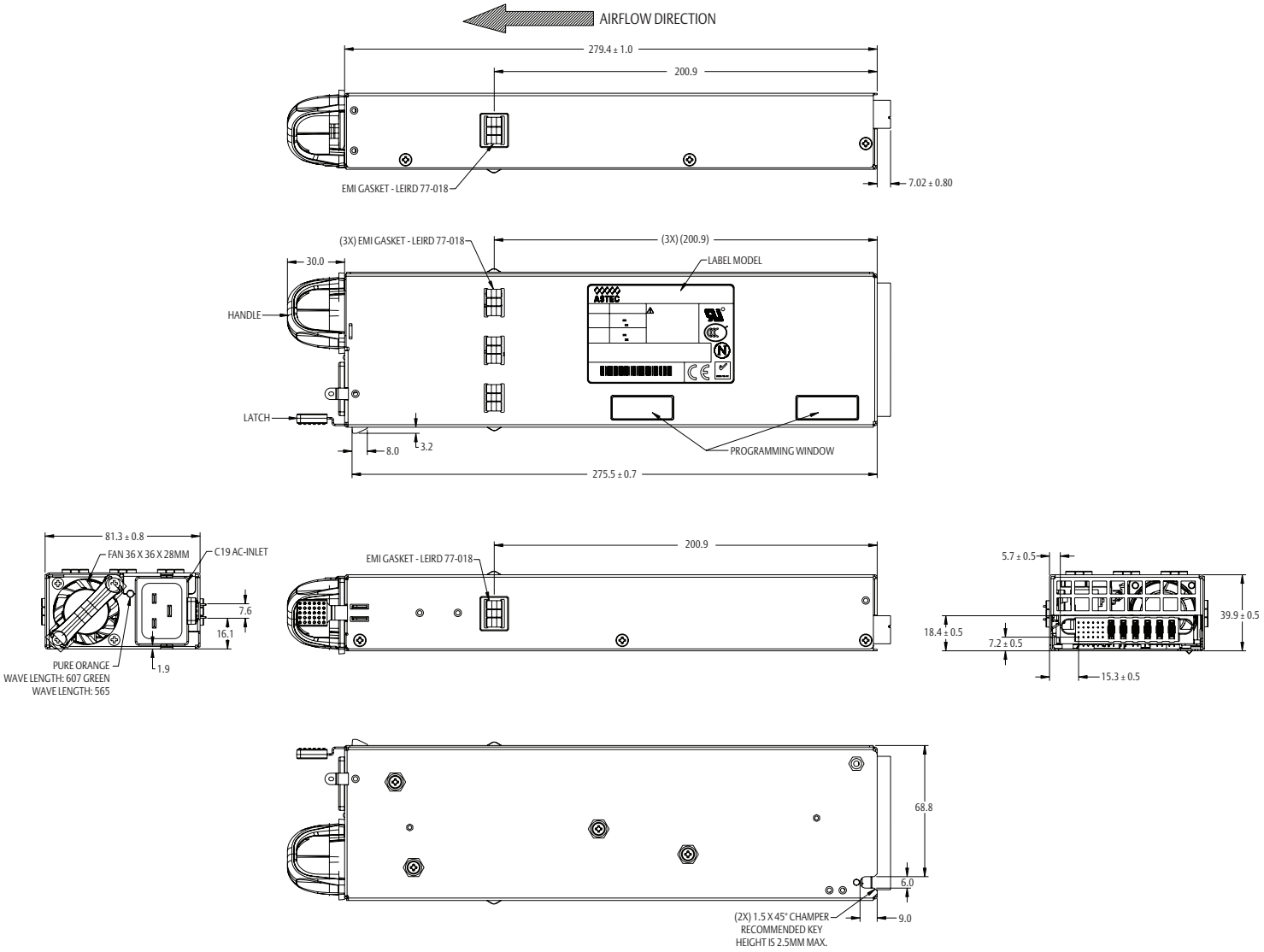

DC Output Connector Pinout Assignment

Male connector as viewed from the rear of the supply:

D1	D2	D3	D4	D5	D6	PB1	PB2	PB3	PB4	PB5	PB6
C1	C2	C3	C4	C5	C6						
B1	B2	B3	B4	B5	B6						
A1	A2	A3	A4	A5	A6						

P1 - Power Supply Side	
1.	FCI Power Blade 51721 series 51721-10002406AA
2.	Molex Power Connector SD-87667 series 87667-7002

Mating Connector (System Side)	
1.	FCI Power Blade 51741-10002406CC Straight Pins
2.	FCI Power Blade 51761-10002406AALF Right Angle

Pin Assignments	
Pin	Signal Name
PB 1	Main output return
PB 2	Main output return
PB 3	Main output return
PB 4	+ Main output
PB 5	+ Main output
PB 6	+ Main output
A1	PS_ON
A2	Main output remote sense return
A3	Spare
A4	PS_SEATED (Power Supply Seated)
A5	STAND-BY
A6	STAND-BY RETURN
B1	AC_OK (AC Input Present)
B2	Main output remote sense
B3	Main output current share
B4	PS_INHIBIT / PS_Kill
B5	STAND-BY
B6	STAND-BY RETURN
C1	SDA (I^2C Data Signal)
C2	SCL (I^2C Clock Signal)*
C3	POWER GOOD
C4	Spare
C5	STAND-BY
C6	STAND-BY RETURN
D1	A0 (I^2C Address BIT 0 Signal)
D2	A1 (I^2C Address BIT 1 Signal)
D3	S_INT (Alarm)
D4	STAND-BY RMT SENSE
D5	STAND-BY
D6	STAND-BY RETURN

*Supports I^2C standard mode (100 kHz) only

Americas
5810 Van Allen Way
Carlsbad, CA 92008
USA
Telephone: +1 760 930 4600
Facsimile: +1 760 930 0698

Europe (UK)
Waterfront Business Park
Merry Hill, Dudley
West Midlands, DY5 1LX
United Kingdom
Telephone: +44 (0) 1384 842 211
Facsimile: +44 (0) 1384 843 355

Asia (HK)
14/F, Lu Plaza
2 Wing Yip Street
Kwun Tong, Kowloon
Hong Kong
Telephone: +852 2176 3333
Facsimile: +852 2176 3888

For global contact, visit:

www.Emerson.com/EmbeddedPower

techsupport.embeddedpower@emerson.com

While every precaution has been taken to ensure accuracy and completeness in this literature, Emerson Network Power assumes no responsibility, and disclaims all liability for damages resulting from use of this information or for any errors or omissions.

Emerson Network Power.
The global leader in enabling business-critical continuity.

- AC Power
- Connectivity
- DC Power
- Embedded Computing
- **Embedded Power**
- Monitoring
- Outside Plant
- Power Switching & Controls
- Precision Cooling
- Racks & Integrated Cabinets
- Services
- Surge Protection

EmersonNetworkPower.com

Emerson Network Power and the Emerson Network Power logo are trademarks and service marks of Emerson Electric Co.
©2011 Emerson Electric Co.

НИОКР СИСТЕМС

ООО «НИОКРсистемс» - это оперативные поставки широкого спектра электронных компонентов отечественного и импортного производства напрямую от производителей и с крупнейших мировых складов. Реализуемая нашей компанией продукция насчитывает более полумиллиона наименований.

Благодаря этому наша компания предлагает к поставке практически не ограниченный ассортимент компонентов как оптовыми, мелкооптовыми партиями, так и в розницу.

Благодаря развитой сети поставщиков, помогаем в поиске и приобретении экзотичных или снятых с производства компонентов.

Наша компания это:

- Гарантия качества поставляемой продукции
- Широкий ассортимент
- Минимальные сроки поставок
- Техническая поддержка
- Подбор комплектации
- Индивидуальный подход
- Гибкое ценообразование
- Работаем по 275 ФЗ

ООО «НИОКР СИТЕМС»
Москва, 125362, Россия, ул. Вишневая, д. 9, к. 1, Блок 104 а и 104 в

Телефон: 8 (495) 268-14-82
Email: n@nsistems.ru

ИНН: 7735154786
ОГРН: 1167746717709