High Voltage, Bidirectional Current Shunt Monitor

Data Sheet

AD8210

FEATURES

- ±4000 V HBM ESD
- High common-mode voltage range
  - −2 V to +65 V operating
  - −5 V to +68 V survival
- Buffered output voltage
- 5 mA output drive capability
- Wide operating temperature range: −40°C to +125°C
- Ratiometric half-scale output offset
- Excellent ac and dc performance
  - 1 µV/°C typical offset drift
  - 10 ppm/°C typical gain drift
  - 120 dB typical CMRR at dc
  - 80 dB typical CMRR at 100 kHz
- Available in 8-lead SOIC
- Qualified for automotive applications

APPLICATIONS

- Current sensing
  - Motor controls
  - Transmission controls
  - Diesel injection controls
  - Engine management
  - Suspension controls
  - Vehicle dynamic controls
  - DC-to-dc converters

FUNCTIONAL BLOCK DIAGRAM

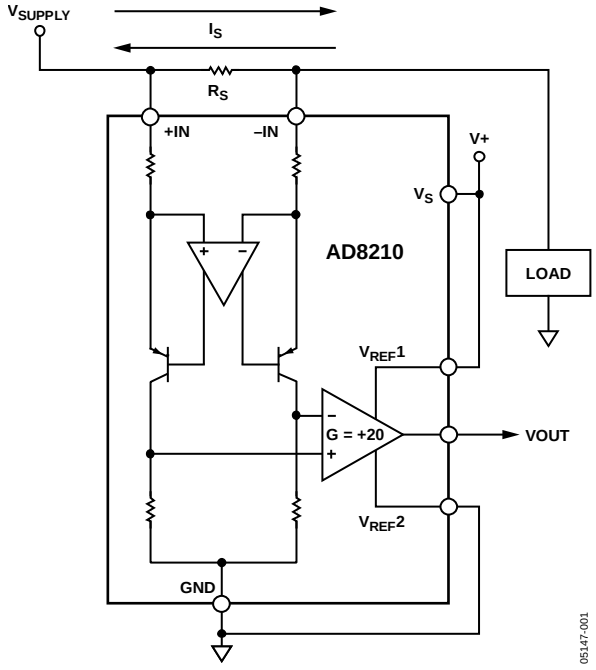

Figure 1.

GENERAL DESCRIPTION

The AD8210 is a single-supply, difference amplifier ideal for amplifying small differential voltages in the presence of large common-mode voltages. The operating input common-mode voltage range extends from −2 V to +65 V. The typical supply voltage is 5 V.

The AD8210 is offered in a SOIC package. The operating temperature range is −40°C to +125°C.

Excellent ac and dc performance over temperature keep errors in the measurement loop to a minimum. Offset drift and gain drift are guaranteed to a maximum of 8 µV/°C and 20 ppm/°C, respectively.

The output offset can be adjusted from 0.05 V to 4.9 V with a 5 V supply by using the $V_{REF}1$ pin and the $V_{REF}2$ pin. With the $V_{REF}1$ pin attached to the V+ pin and the $V_{REF}2$ pin attached to the GND pin, the output is set at half scale. Attaching both $V_{REF}1$ and $V_{REF}2$ to GND causes the output to be unipolar, starting near ground. Attaching both $V_{REF}1$ and $V_{REF}2$ to V+ causes the output to be unipolar, starting near V+. Other offsets can be obtained by applying an external voltage to $V_{REF}1$ and $V_{REF}2$.

Rev. D
Document Feedback
Information furnished by Analog Devices is believed to be accurate and reliable. However, no responsibility is assumed by Analog Devices for its use, nor for any infringements of patents or other rights of third parties that may result from its use. Specifications subject to change without notice. No license is granted by implication or otherwise under any patent or patent rights of Analog Devices. Trademarks and registered trademarks are the property of their respective owners.

One Technology Way, P.O. Box 9106, Norwood, MA 02062-9106, U.S.A.
Tel: 781.329.4700 ©2006–2013 Analog Devices, Inc. All rights reserved.
Technical Support www.analog.com

TABLE OF CONTENTS

Features ... 1
Applications ... 1
Functional Block Diagram ... 1
General Description ... 1
Revision History ... 2
Specifications ... 3
Absolute Maximum Ratings ... 4
ESD Caution ... 4
Pin Configuration and Function Descriptions ... 5
Typical Performance Characteristics ... 6
Theory of Operation ... 10
Modes of Operation ... 11
Unidirectional Operation ... 11
Bidirectional Operation ... 11
Input Filtering ... 13
Applications Information ... 14
High-Side Current Sense with a Low-Side Switch ... 14
High-Side Current Sense with a High-Side Switch ... 14
H-Bridge Motor Control ... 14
Outline Dimensions ... 15
Ordering Guide ... 15
Automotive Products ... 15

REVISION HISTORY

6/13—Rev. C to Rev. D

Added Automotive Information (Throughout) ... 1
Changes to Equation 1 ... 13
Added Automotive Products Section ... 15

2/12—Rev. B to Rev. C

Changes to Ordering Guide ... 15

5/09—Rev. A to Rev. B

Changes to Ordering Guide ... 15

4/07—Rev. 0 to Rev. A

Changes to Features ... 1
Changes to Input Section ... 3
Updated Outline Dimensions ... 15

4/06—Revision 0: Initial Version

SPECIFICATIONS

T_A = operating temperature range, V_S = 5 V, unless otherwise noted.

Table 1.

Parameter	AD8210 SOIC[1] Min	Typ	Max	Unit	Conditions
GAIN					
Initial		20		V/V	
Accuracy			±0.5	%	25°C, $V_O \geq 0.1$ V dc
Accuracy Over Temperature			±0.7	%	T_A
Gain Drift			20	ppm/°C	
VOLTAGE OFFSET					
Offset Voltage (RTI)			±1.0	mV	25°C
Over Temperature (RTI)			±1.8	mV	T_A
Offset Drift			±8.0	µV/°C	
INPUT					
Input Impedance					
Differential		2		kΩ	
Common Mode		5		MΩ	V common mode > 5 V
		1.5		kΩ	V common mode < 5 V
Common-Mode Input Voltage Range	−2		+65	V	Common mode, continuous
Differential Input Voltage Range		250		mV	Differential[2]
Common-Mode Rejection	100	120		dB	T_A, f = dc, V_{CM} > 5 V
	80	95		dB	T_A, f = dc to 100 kHz[3], V_{CM} < 5 V
		80		dB	T_A, f = 100 kHz[3], V_{CM} > 5 V
	80			dB	T_A, f = 40 kHz[3], V_{CM} > 5 V
OUTPUT					
Output Voltage Range	0.05		4.9	V	R_L = 25 kΩ
Output Impedance		2		Ω	
DYNAMIC RESPONSE					
Small Signal −3 dB Bandwidth		450		kHz	
Slew Rate		3		V/µs	
NOISE					
0.1 Hz to 10 Hz, RTI		7		µV p-p	
Spectral Density, 1 kHz, RTI		70		nV/√Hz	
OFFSET ADJUSTMENT					
Ratiometric Accuracy[4]	0.499		0.501	V/V	Divider to supplies
Accuracy, RTO			±0.6	mV/V	Voltage applied to $V_{REF}1$ and $V_{REF}2$ in parallel
Output Offset Adjustment Range	0.05		4.9	V	V_S = 5 V
V_{REF} Input Voltage Range	0.0		V_S	V	
V_{REF} Divider Resistor Values	24	32	40	kΩ	
POWER SUPPLY, V_S					
Operating Range	4.5	5.0	5.5	V	
Quiescent Current Over Temperature			2	mA	V_{CM} > 5 V[5]
Power Supply Rejection Ratio	80			dB	
TEMPERATURE RANGE					
For Specified Performance	−40		+125	°C	

[1] T_{MIN} to T_{MAX} = −40°C to +125°C.
[2] Differential input voltage range = ±125 mV with half-scale output offset.
[3] Source imbalance < 2 Ω.
[4] The offset adjustment is ratiometric to the power supply when $V_{REF}1$ and $V_{REF}2$ are used as a divider between the supplies.
[5] When the input common mode is less than 5 V, the supply current increases. This can be calculated with the following formula: $I_S = -0.7\ (V_{CM}) + 4.2$ (see Figure 21).

ABSOLUTE MAXIMUM RATINGS

Table 2.

Parameter	Rating
Supply Voltage	12.5 V
Continuous Input Voltage (V_{CM})	−5 V to +68 V
Reverse Supply Voltage	0.3 V
ESD Rating	
HBM (Human Body Model)	±4000 V
CDM (Charged Device Model)	±1000 V
Operating Temperature Range	−40°C to +125°C
Storage Temperature Range	−65°C to +150°C
Output Short-Circuit Duration	Indefinite

Stresses above those listed under Absolute Maximum Ratings may cause permanent damage to the device. This is a stress rating only; functional operation of the device at these or any other conditions above those indicated in the operational section of this specification is not implied. Exposure to absolute maximum rating conditions for extended periods may affect device reliability.

ESD CAUTION

ESD (electrostatic discharge) sensitive device. Charged devices and circuit boards can discharge without detection. Although this product features patented or proprietary protection circuitry, damage may occur on devices subjected to high energy ESD. Therefore, proper ESD precautions should be taken to avoid performance degradation or loss of functionality.

PIN CONFIGURATION AND FUNCTION DESCRIPTIONS

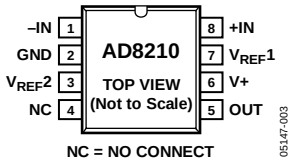

Figure 2. Pin Configuration

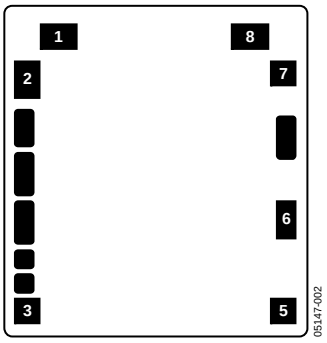

Figure 3. Metallization Diagram

Table 3. Pin Function Descriptions

Pin No.	Mnemonic	X	Y
1	−IN	−443	+584
2	GND	−479	+428
3	$V_{REF}2$	−466	−469
4	NC		
5	OUT	+466	−537
6	V+	+501	−95
7	$V_{REF}1$	+475	+477
8	+IN	+443	+584

TYPICAL PERFORMANCE CHARACTERISTICS

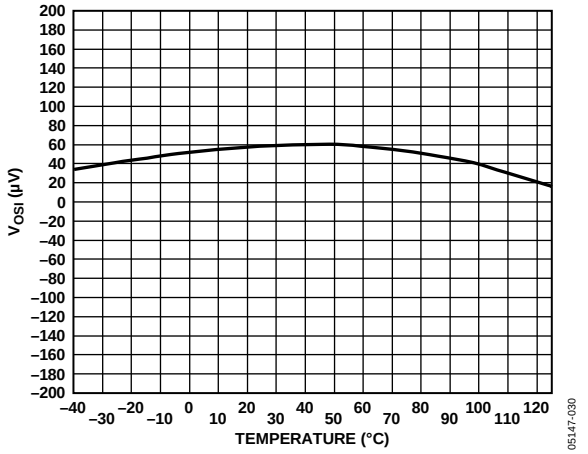

Figure 4. Typical Offset Drift

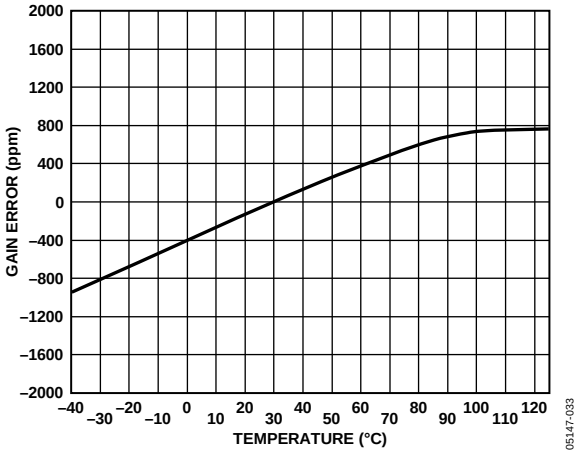

Figure 7. Typical Gain Drift

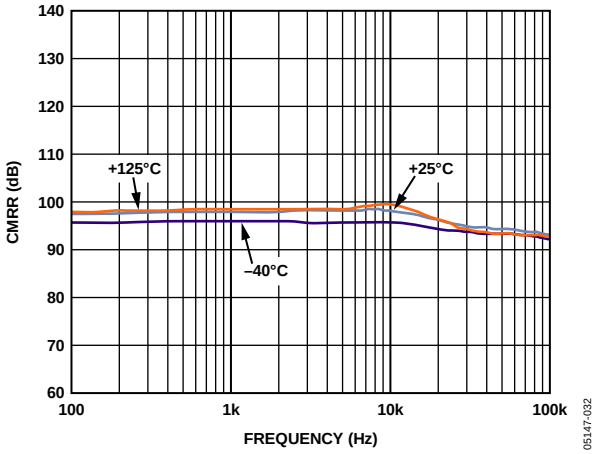

Figure 5. CMRR vs. Frequency and Temperature (Common-Mode Voltage < 5 V)

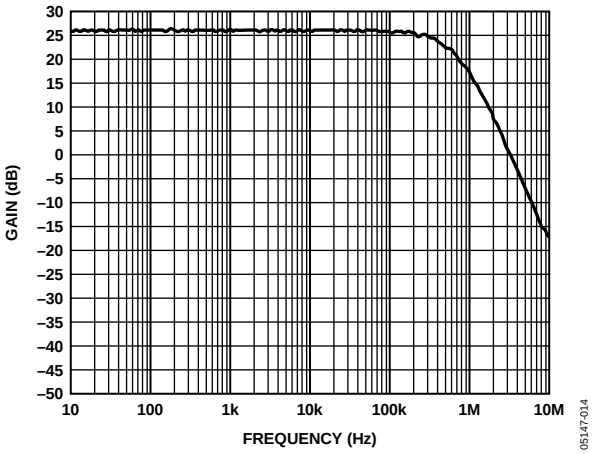

Figure 8. Typical Small Signal Bandwidth (VOUT = 200 mV p-p)

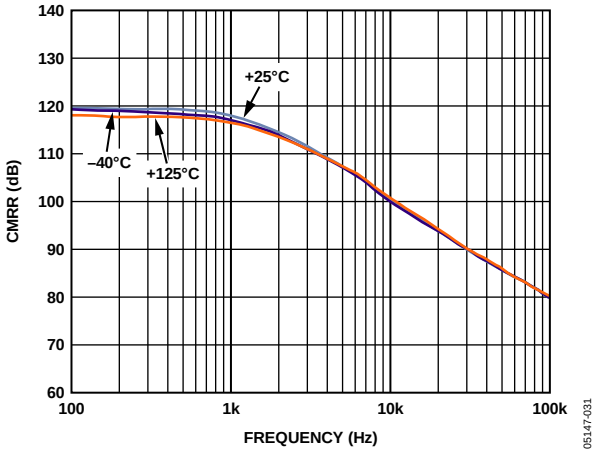

Figure 6. CMRR vs. Frequency and Temperature (Common-Mode Voltage > 5 V)

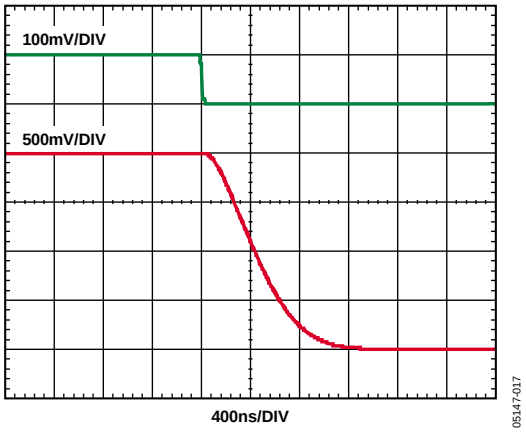

Figure 9. Fall Time

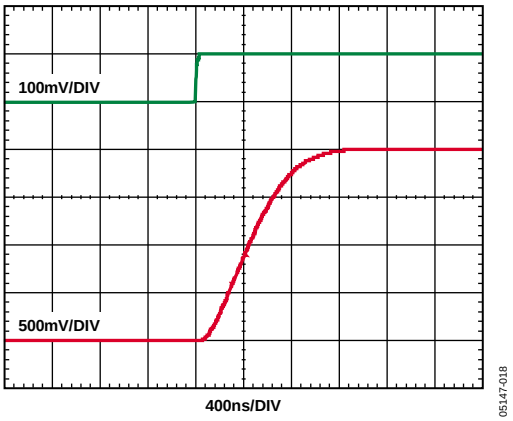

Figure 10. Rise Time

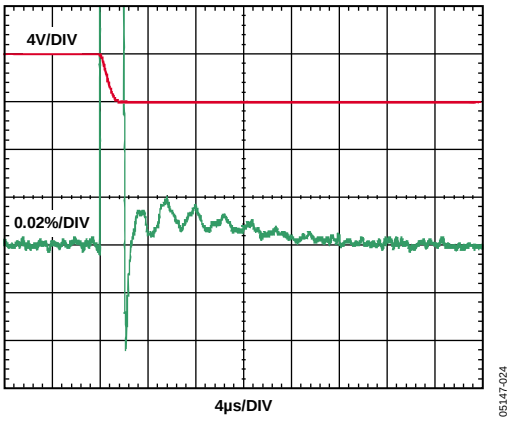

Figure 13. Settling Time (Falling)

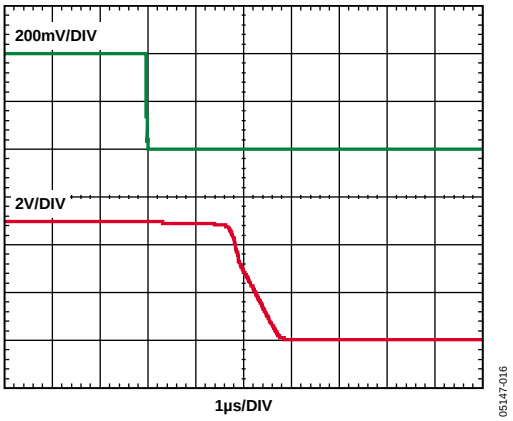

Figure 11. Differential Overload Recovery (Falling)

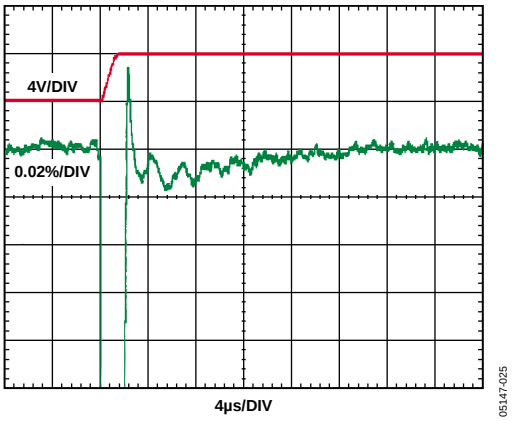

Figure 14. Settling Time (Rising)

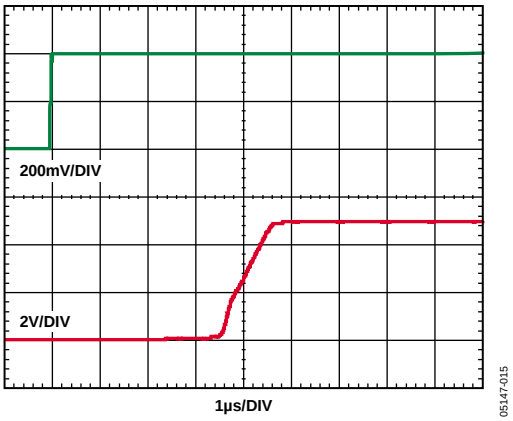

Figure 12. Differential Overload Recovery (Rising)

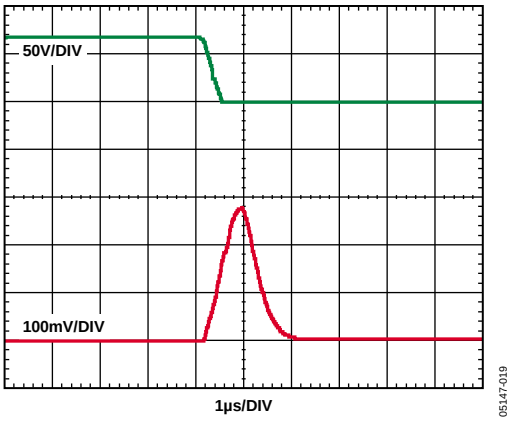

Figure 15. Common-Mode Response (Falling)

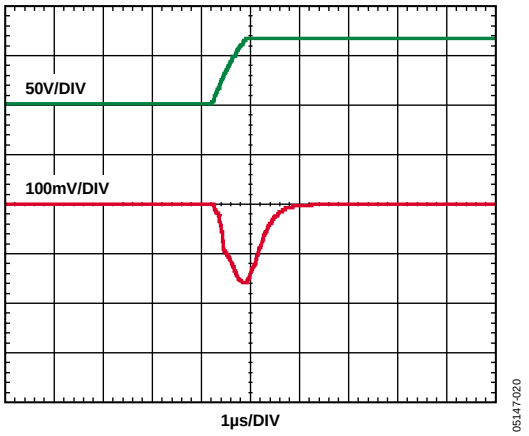

Figure 16. Common-Mode Response (Rising)

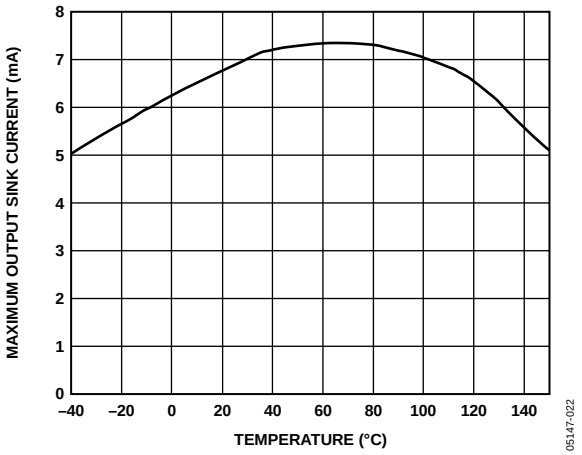

Figure 17. Output Sink Current vs. Temperature

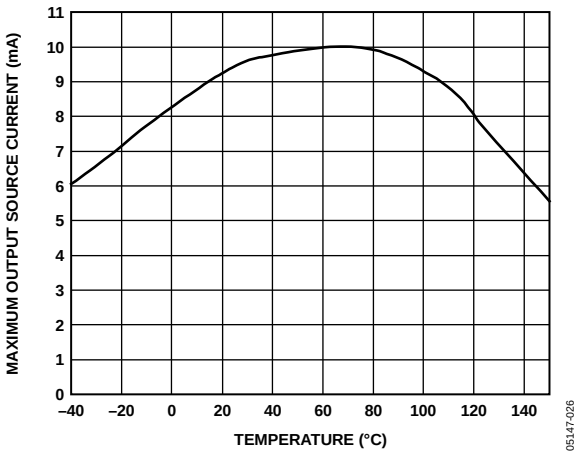

Figure 18. Output Source Current vs. Temperature

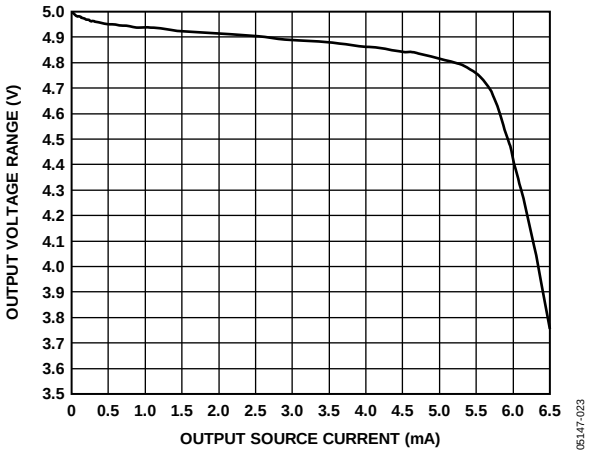

Figure 19. Output Voltage Range vs. Output Source Current

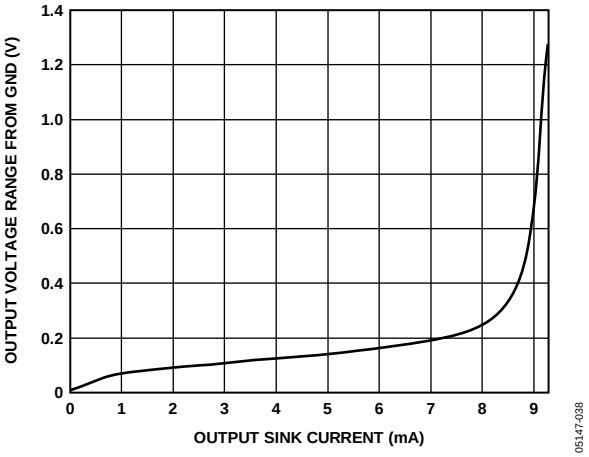

Figure 20. Output Voltage Range from GND vs. Output Sink Current

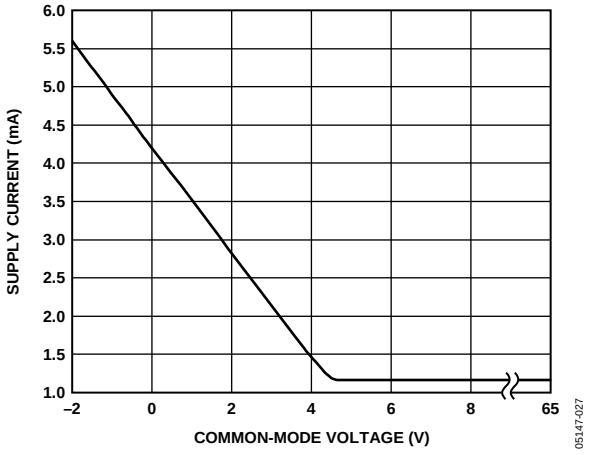

Figure 21. Supply Current vs. Common-Mode Voltage

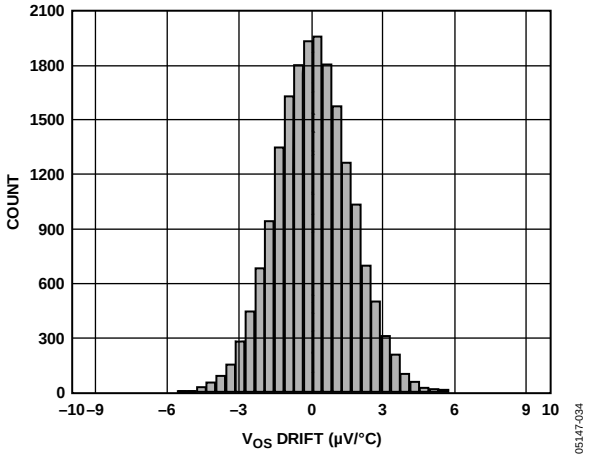

Figure 22. Offset Drift Distribution (µV/°C), SOIC, Temperature Range = −40°C to +125°C

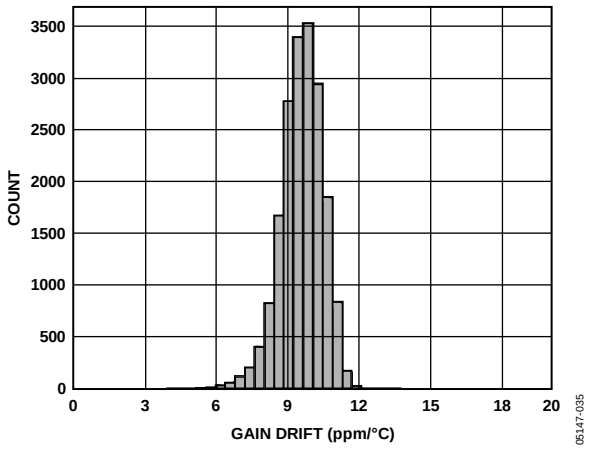

Figure 23. Gain Drift Distribution (ppm/°C), SOIC, Temperature = −40°C to +125°C

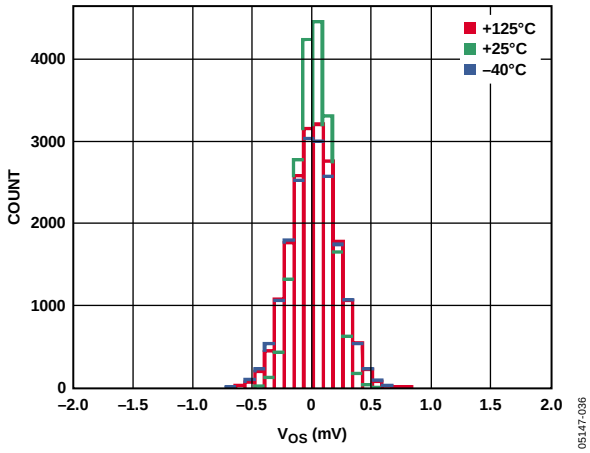

Figure 24. Offset Distribution (µV), SOIC, VCM = 5 V

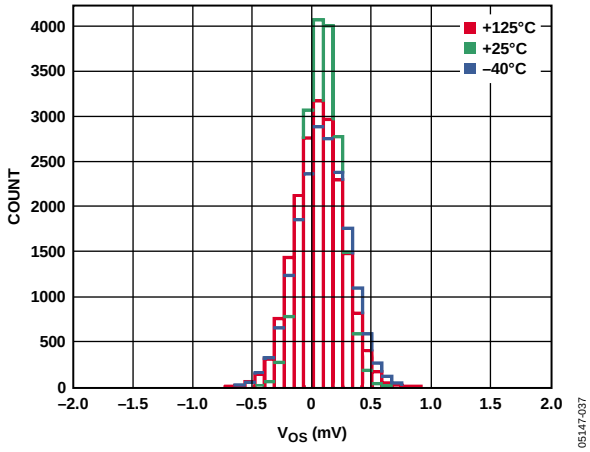

Figure 25. Offset Distribution (µV), SOIC, VCM = 0 V

THEORY OF OPERATION

In typical applications, the AD8210 amplifies a small differential input voltage generated by the load current flowing through a shunt resistor. The AD8210 rejects high common-mode voltages (up to 65 V) and provides a ground referenced buffered output that interfaces with an analog-to-digital converter (ADC). Figure 26 shows a simplified schematic of the AD8210.

The AD8210 is comprised of two main blocks, a differential amplifier and an instrumentation amplifier. A load current flowing through the external shunt resistor produces a voltage at the input terminals of the AD8210. The input terminals are connected to the differential amplifier (A1) by R1 and R2. A1 nulls the voltage appearing across its own input terminals by adjusting the current through R1 and R2 with Q1 and Q2. When the input signal to the AD8210 is 0 V, the currents in R1 and R2 are equal. When the differential signal is nonzero, the current increases through one of the resistors and decreases in the other. The current difference is proportional to the size and polarity of the input signal.

The differential currents through Q1 and Q2 are converted into a differential voltage by R3 and R4. A2 is configured as an instrumentation amplifier. The differential voltage is converted into a single-ended output voltage by A2. The gain is internally set with precision-trimmed, thin film resistors to 20 V/V.

The output reference voltage is easily adjusted by the $V_{REF}1$ pin and the $V_{REF}2$ pin. In a typical configuration, $V_{REF}1$ is connected to V_{CC} while $V_{REF}2$ is connected to GND. In this case, the output is centered at $V_{CC}/2$ when the input signal is 0 V.

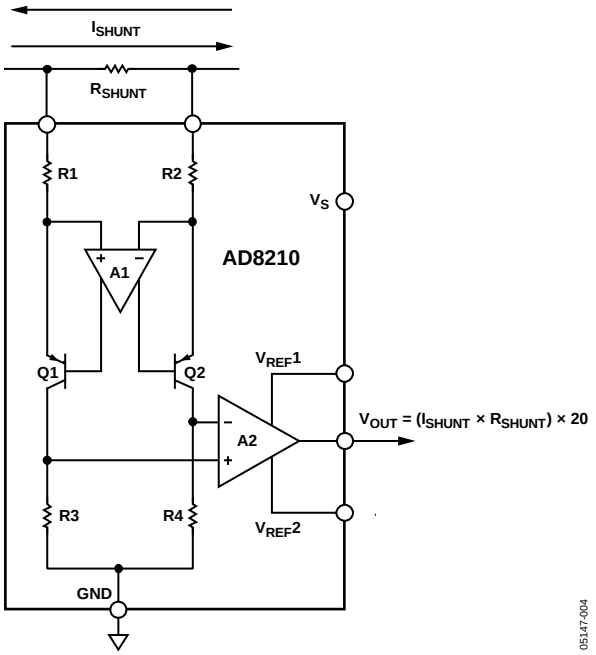

Figure 26. Simplified Schematic

MODES OF OPERATION

The AD8210 can be adjusted for unidirectional or bidirectional operation.

UNIDIRECTIONAL OPERATION

Unidirectional operation allows the AD8210 to measure currents through a resistive shunt in one direction. The basic modes for unidirectional operation are ground referenced output mode and V+ referenced output mode.

In unidirectional operation, the output can be set at the negative rail (near ground) or at the positive rail (near V+) when the differential input is 0 V. The output moves to the opposite rail when a correct polarity differential input voltage is applied. In this case, full scale is approximately 250 mV. The required polarity of the differential input depends on the output voltage setting. If the output is set at ground, the polarity needs to be positive to move the output up (see Table 5). If the output is set at the positive rail, the input polarity needs to be negative to move the output down (see Table 6).

Ground Referenced Output

When using the AD8210 in this mode, both reference inputs are tied to ground, which causes the output to sit at the negative rail when the differential input voltage is zero (see Figure 27 and Table 4).

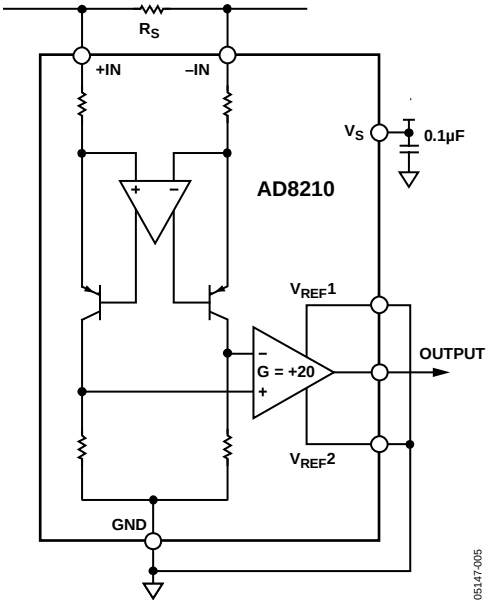

Figure 27. Ground Referenced Output

Table 4. V+ = 5 V

V_{IN} (Referred to –IN)	V_O
0 V	0.05 V
250 mV	4.9 V

V+ Referenced Output

This mode is set when both reference pins are tied to the positive supply. It is typically used when the diagnostic scheme requires detection of the amplifier and wiring before power is applied to the load (see Figure 28 and Table 5).

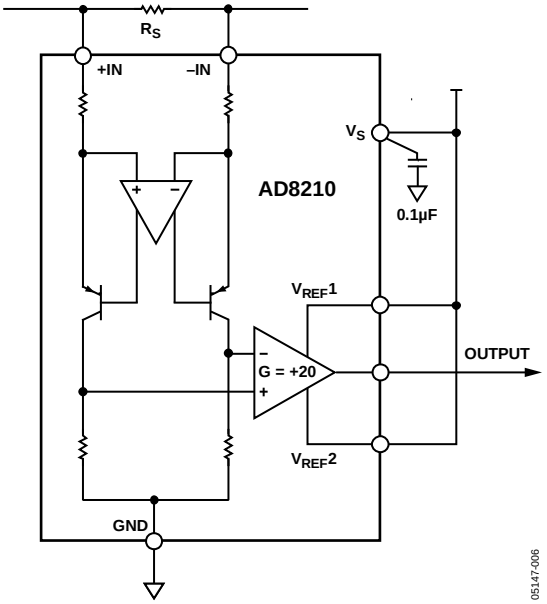

Figure 28. V+ Referenced Output

Table 5. V+ = 5 V

V_{IN} (Referred to –IN)	V_O
0 V	4.9 V
−250 mV	0.05 V

BIDIRECTIONAL OPERATION

Bidirectional operation allows the AD8210 to measure currents through a resistive shunt in two directions. The output offset can be set anywhere within the output range. Typically, it is set at half scale for equal measurement range in both directions. In some cases, however, it is set at a voltage other than half scale when the bidirectional current is nonsymmetrical.

Table 6. V+ = 5 V, V_O = 2.5 V with V_{IN} = 0 V

V_{IN} (Referred to –IN)	V_O
+125 mV	4.9 V
−125 mV	0.05 V

Adjusting the output can also be accomplished by applying voltage(s) to the reference inputs.

External Referenced Output

Tying both V_{REF} pins together to an external reference produces an output offset at the reference voltage when there is no differential input (see Figure 29). When the input is negative relative to the −IN pin, the output moves down from the reference voltage. When the input is positive relative to the −IN pin, the output increases.

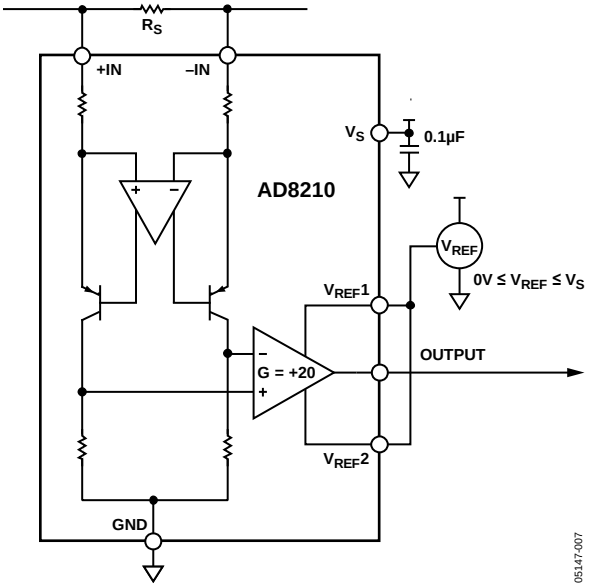

Figure 29. External Reference Output

Splitting an External Reference

In this case, an external reference is divided by two with an accuracy of approximately 0.2% by connecting one V_{REF} pin to ground and the other V_{REF} pin to the reference voltage (see Figure 30).

Note that Pin $V_{REF}1$ and Pin $V_{REF}2$ are tied to internal precision resistors that connect to an internal offset node. There is no operational difference between the pins.

For proper operation, the AD8210 output offset should not be set with a resistor voltage divider. Any additional external resistance could create a gain error. A low impedance voltage source should be used to set the output offset of the AD8210.

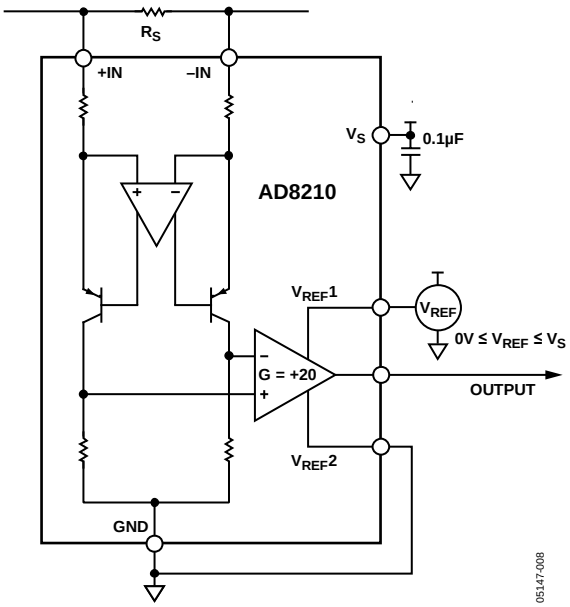

Figure 30. Split External Reference

Splitting the Supply

By tying one reference pin to V+ and the other to the GND pin, the output is set at midsupply when there is no differential input (see Figure 31). This mode is beneficial because no external reference is required to offset the output for bidirectional current measurement. This creates a midscale offset that is ratiometric to the supply, meaning that if the supply increases or decreases, the output still remains at half scale. For example, if the supply is 5.0 V, the output is at half scale or 2.5 V. If the supply increases by 10% (to 5.5 V), the output also increases by 10% (2.75 V).

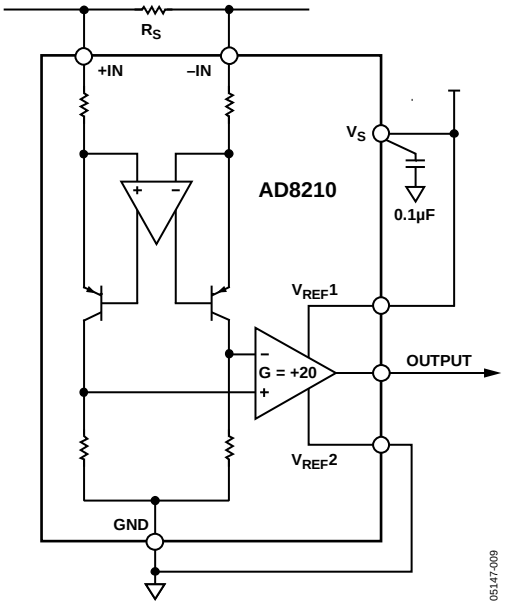

Figure 31. Split Supply

INPUT FILTERING

In typical applications, such as motor and solenoid current sensing, filtering at the input of the AD8210 can be beneficial in reducing differential noise, as well as transients and current ripples flowing through the input shunt resistor. An input low-pass filter can be implemented as shown in Figure 32.

The 3 dB frequency for this filter can be calculated by

$$f_3\,\mathrm{dB} = \frac{1}{2\pi \times 2 \times R_{FILTER} \times C_{FILTER}} \quad (1)$$

Adding outside components, such as R_{FILTER} and C_{FILTER}, introduces additional errors to the system. To minimize these errors as much as possible, it is recommended that R_{FILTER} be 10 Ω or lower. By adding the R_{FILTER} in series with the 2 kΩ internal input resistors of the AD8210, a gain error is introduced. This can be calculated by

$$Gain\ Error(\%) = 100 - \left(100 \times \frac{2\,\mathrm{k\Omega}}{2\,\mathrm{k\Omega} - R_{FILTER}} \right) \quad (2)$$

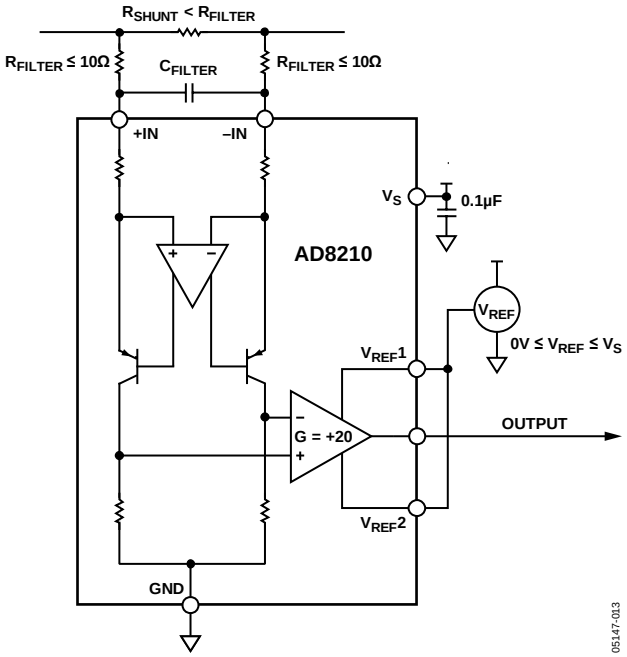

Figure 32. Input Low-Pass Filtering

APPLICATIONS INFORMATION

The AD8210 is ideal for high-side or low-side current sensing. Its accuracy and performance benefits applications, such as 3-phase and H-bridge motor control, solenoid control, and power supply current monitoring.

For solenoid control, two typical circuit configurations are used: high-side current sense with a low-side switch, and high-side current sense with a high-side switch.

HIGH-SIDE CURRENT SENSE WITH A LOW-SIDE SWITCH

In this case, the PWM control switch is ground referenced. An inductive load (solenoid) is tied to a power supply. A resistive shunt is placed between the switch and the load (see Figure 33). An advantage of placing the shunt on the high side is that the entire current, including the recirculation current, can be measured because the shunt remains in the loop when the switch is off. In addition, diagnostics can be enhanced because short circuits to ground can be detected with the shunt on the high side.

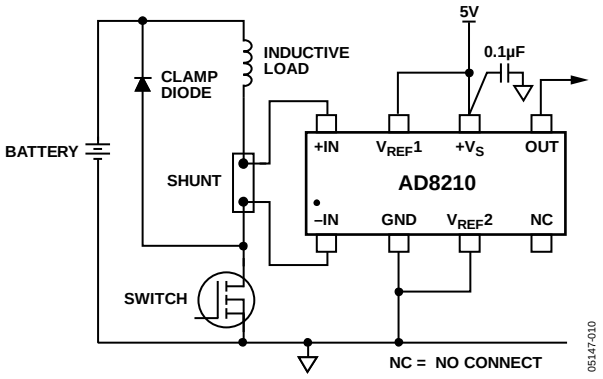

Figure 33. Low-Side Switch

In this circuit configuration, when the switch is closed, the common-mode voltage moves down to the negative rail. When the switch is opened, the voltage reversal across the inductive load causes the common-mode voltage to be held one diode drop above the battery by the clamp diode.

HIGH-SIDE CURRENT SENSE WITH A HIGH-SIDE SWITCH

This configuration minimizes the possibility of unexpected solenoid activation and excessive corrosion (see Figure 34). In this case, both the switch and the shunt are on the high side. When the switch is off, the battery is removed from the load, which prevents damage from potential short circuits to ground, while still allowing the recirculation current to be measured and diagnostics to be preformed. Removing the power supply from the load for the majority of the time minimizes the corrosive effects that could be caused by the differential voltage between the load and ground.

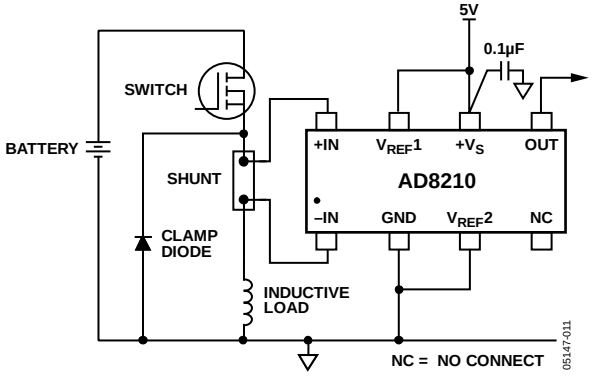

Figure 34. High-Side Switch

Using a high-side switch connects the battery voltage to the load when the switch is closed. This causes the common-mode voltage to increase to the battery voltage. In this case, when the switch is opened, the voltage reversal across the inductive load causes the common-mode voltage to be held one diode drop below ground by the clamp diode.

H-BRIDGE MOTOR CONTROL

Another typical application for the AD8210 is as part of the control loop in H-bridge motor control. In this case, the AD8210 is placed in the middle of the H-bridge (see Figure 35) so that it can accurately measure current in both directions by using the shunt available at the motor. This configuration is beneficial for measuring the recirculation current to further enhance the control loop diagnostics.

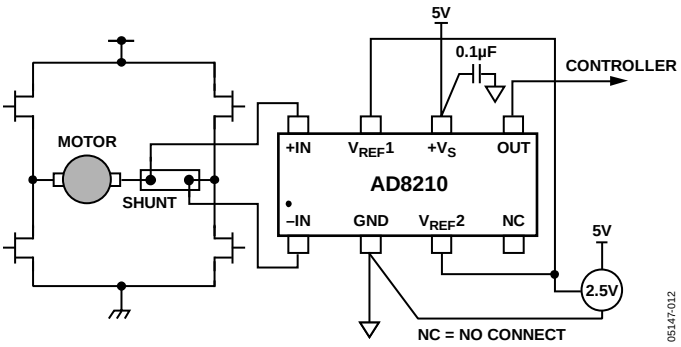

Figure 35. Motor Control Application

The AD8210 measures current in both directions as the H-bridge switches and the motor changes direction. The output of the AD8210 is configured in an external reference bidirectional mode (see the Modes of Operation section).

OUTLINE DIMENSIONS

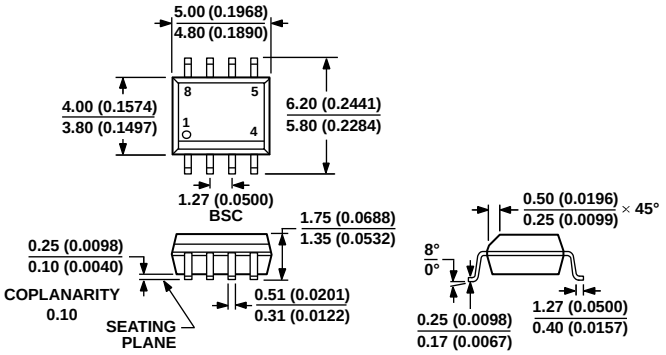

Figure 36. 8-Lead Standard Small Outline Package [SOIC_N]
Narrow Body (R-8)
Dimensions shown in millimeters and (inches)

ORDERING GUIDE

Model[1, 2]	Temperature Range	Package Description	Package Option
AD8210YRZ	−40°C to +125°C	8-Lead SOIC_N	R-8
AD8210YRZ-REEL	−40°C to +125°C	8-Lead SOIC_N, 13″ Tape and Reel	R-8
AD8210YRZ-REEL7	−40°C to +125°C	8-Lead SOIC_N, 7″ Tape and Reel	R-8
AD8210WYRZ	−40°C to +125°C	8-Lead SOIC_N	R-8
AD8210WYRZ-RL	−40°C to +125°C	8-Lead SOIC_N, 13″ Tape and Reel	R-8
AD8210WYRZ-R7	−40°C to +125°C	8-Lead SOIC_N, 7″ Tape and Reel	R-8
AD8210WYC-P3	−40°C to +125°C	Die	

[1] Z = RoHS Compliant Part.
[2] W = Qualified for Automotive Applications.

AUTOMOTIVE PRODUCTS

The AD8210W models are available with controlled manufacturing to support the quality and reliability requirements of automotive applications. Note that these automotive models may have specifications that differ from the commercial models; therefore, designers should review the Specifications section of this data sheet carefully. Only the automotive grade products shown are available for use in automotive applications. Contact your local Analog Devices account representative for specific product ordering information and to obtain the specific Automotive Reliability reports for these models.

NOTES

©2006–2013 Analog Devices, Inc. All rights reserved. Trademarks and registered trademarks are the property of their respective owners.
D05147-0-6/13(D)

НИОКР СИСТЕМС

ООО «НИОКРсистемс» - это оперативные поставки широкого спектра электронных компонентов отечественного и импортного производства напрямую от производителей и с крупнейших мировых складов. Реализуемая нашей компанией продукция насчитывает более полумиллиона наименований.

Благодаря этому наша компания предлагает к поставке практически не ограниченный ассортимент компонентов как оптовыми, мелкооптовыми партиями, так и в розницу.

Благодаря развитой сети поставщиков, помогаем в поиске и приобретении экзотичных или снятых с производства компонентов.

Наша компания это:

- Гарантия качества поставляемой продукции
- Широкий ассортимент
- Минимальные сроки поставок
- Техническая поддержка
- Подбор комплектации
- Индивидуальный подход
- Гибкое ценообразование
- Работаем по 275 ФЗ

ООО «НИОКР СИТЕМС»
Москва, 125362, Россия, ул. Вишневая, д. 9, к. 1, Блок 104 а и 104 в

Телефон: 8 (495) 268-14-82
Email: n@nsistems.ru

ИНН: 7735154786
ОГРН: 1167746717709