High Performance Schottky Rectifier, 10 A

D²PAK

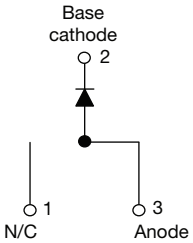

FEATURES

- 175 °C T_J operation
- Low forward voltage drop
- High frequency operation
- High purity, high temperature epoxy encapsulation for enhanced mechanical strength and moisture resistance
- Guard ring for enhanced ruggedness and long term reliability
- Meets MSL level 1, per J-STD-020, LF maximum peak of 260 °C
- AEC-Q101 qualified
- Material categorization: for definitions of compliance please see www.vishay.com/doc?99912

Pb e3 RoHS COMPLIANT HALOGEN FREE

DESCRIPTION

The VS-10TQ...SPbF Schottky rectifier series has been optimized for low reverse leakage at high temperature. The proprietary barrier technology allows for reliable operation up to 175 °C junction temperature. Typical applications are in switching power supplies, converters, freewheeling diodes, and reverse battery protection.

PRODUCT SUMMARY	
Package	D²PAK
$I_{F(AV)}$	10 A
V_R	35 V, 40 V, 45 V
V_F at I_F	0.57 V
I_{RM}	15 mA at 125 °C
T_J max.	175 °C
Diode variation	Single die
E_{AS}	13 mJ

MAJOR RATINGS AND CHARACTERISTICS			
SYMBOL	CHARACTERISTICS	VALUES	UNITS
$I_{F(AV)}$	Rectangular waveform	10	A
V_{RRM}		35/45	V
I_{FSM}	t_p = 5 µs sine	1050	A
V_F	10 A_{pk}, T_J = 125 °C	0.49	V
T_J	Range	-55 to +175	°C

VOLTAGE RATINGS				
PARAMETER	SYMBOL	VS-10TQ035SPbF	VS-10TQ045SPbF	UNITS
Maximum DC reverse voltage	V_R	35	45	V
Maximum working peak reverse voltage	V_{RWM}			

ABSOLUTE MAXIMUM RATINGS					
PARAMETER	SYMBOL	TEST CONDITIONS		VALUES	UNITS
Maximum average forward current See fig. 5	$I_{F(AV)}$	50 % duty cycle at T_C = 151 °C, rectangular waveform		10	A
Maximum peak one cycle non-repetitive surge current See fig. 7	I_{FSM}	5 µs sine or 3 µs rect. pulse	Following any rated load condition and with rated V_{RRM} applied	1050	A
		10 ms sine or 6 ms rect. pulse		280	
Non-repetitive avalanche energy	E_{AS}	T_J = 25 °C, I_{AS} = 2 A, L = 6.5 mH		13	mJ
Repetitive avalanche current	I_{AR}	Current decaying linearly to zero in 1 µs Frequency limited by T_J maximum V_A = 1.5 x V_R typical		2	A

For technical questions within your region: DiodesAmericas@vishay.com, DiodesAsia@vishay.com, DiodesEurope@vishay.com
THIS DOCUMENT IS SUBJECT TO CHANGE WITHOUT NOTICE. THE PRODUCTS DESCRIBED HEREIN AND THIS DOCUMENT ARE SUBJECT TO SPECIFIC DISCLAIMERS, SET FORTH AT www.vishay.com/doc?91000

ELECTRICAL SPECIFICATIONS					
PARAMETER	SYMBOL	TEST CONDITIONS		VALUES	UNITS
Maximum forward voltage drop See fig. 1	V_{FM} (1)	10 A	T_J = 25 °C	0.57	V
		20 A		0.67	
		10 A	T_J = 125 °C	0.49	
		20 A		0.61	
Maximum reverse leakage current See fig. 2	I_{RM} (1)	T_J = 25 °C	V_R = Rated V_R	2	mA
		T_J = 125 °C		15	
Maximum junction capacitance	C_T	V_R = 5 V_{DC} (test signal range 100 kHz to 1 MHz), 25 °C		900	pF
Typical series inductance	L_S	Measured lead to lead 5 mm from package body		8.0	nH
Maximum voltage rate of change	dV/dt	Rated V_R		10 000	V/µs

Note

(1) Pulse width < 300 µs, duty cycle < 2 %

THERMAL - MECHANICAL SPECIFICATIONS					
PARAMETER		SYMBOL	TEST CONDITIONS	VALUES	UNITS
Maximum junction and storage temperature range		T_J, T_{Stg}		-55 to +175	°C
Maximum thermal resistance, junction to case		R_{thJC}	DC operation See fig. 4	2.0	°C/W
Typical thermal resistance, case to heatsink		R_{thCS}	Mounting surface, smooth and greased	0.50	
Approximate weight				2	g
				0.07	oz.
Mounting torque	minimum			6 (5)	kgf · cm (lbf · in)
	maximum			12 (10)	
Marking device			Case style D^2PAK	10TQ045S	

For technical questions within your region: DiodesAmericas@vishay.com, DiodesAsia@vishay.com, DiodesEurope@vishay.com
THIS DOCUMENT IS SUBJECT TO CHANGE WITHOUT NOTICE. THE PRODUCTS DESCRIBED HEREIN AND THIS DOCUMENT ARE SUBJECT TO SPECIFIC DISCLAIMERS, SET FORTH AT www.vishay.com/doc?91000

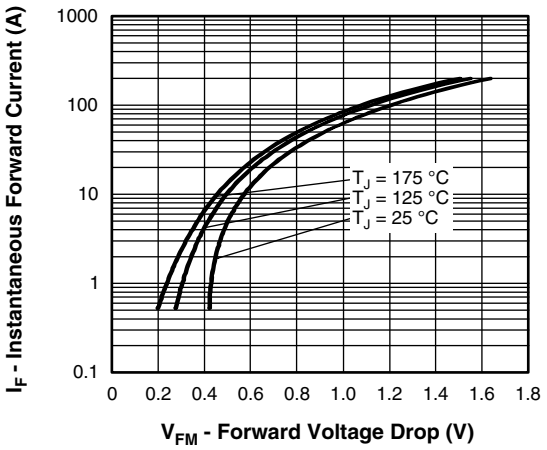

Fig. 1 - Maximum Forward Voltage Drop Characteristics

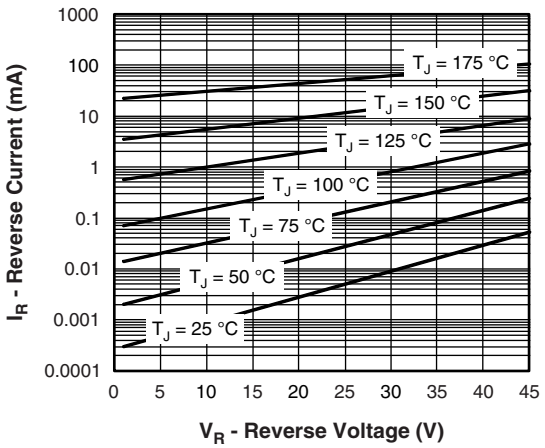

Fig. 2 - Typical Values of Reverse Current vs. Reverse Voltage

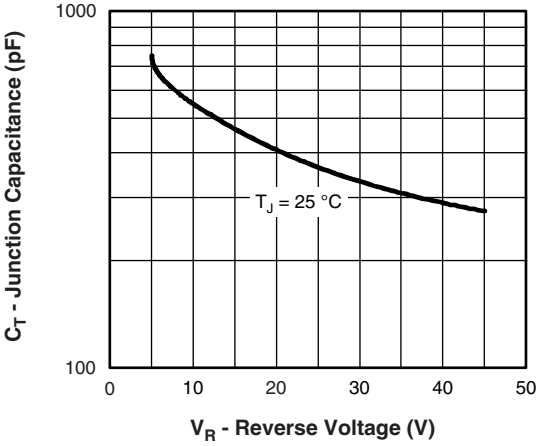

Fig. 3 - Typical Junction Capacitance vs. Reverse Voltage

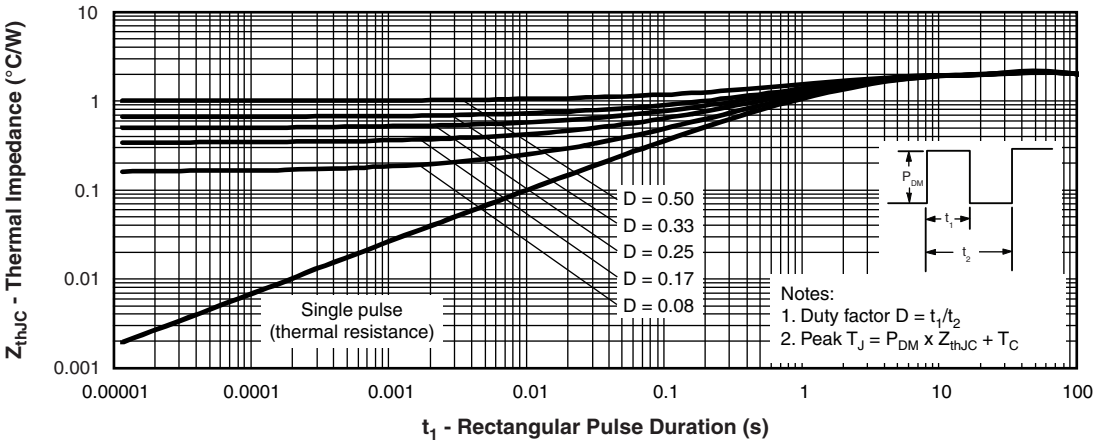

Fig. 4 - Maximum Thermal Impedance Z_{thJC} Characteristics

For technical questions within your region: DiodesAmericas@vishay.com, DiodesAsia@vishay.com, DiodesEurope@vishay.com
THIS DOCUMENT IS SUBJECT TO CHANGE WITHOUT NOTICE. THE PRODUCTS DESCRIBED HEREIN AND THIS DOCUMENT ARE SUBJECT TO SPECIFIC DISCLAIMERS, SET FORTH AT www.vishay.com/doc?91000

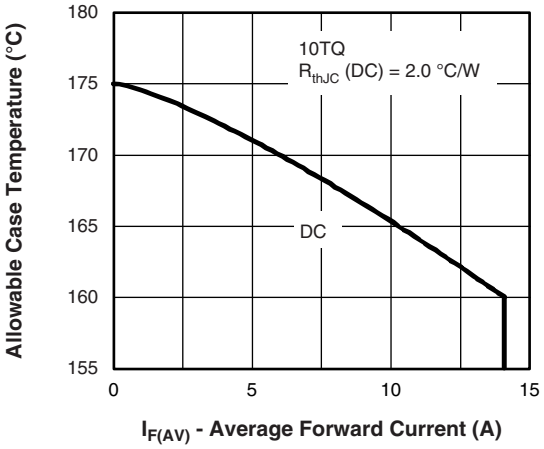

Fig. 5 - Maximum Allowable Case Temperature vs. Average Forward Current

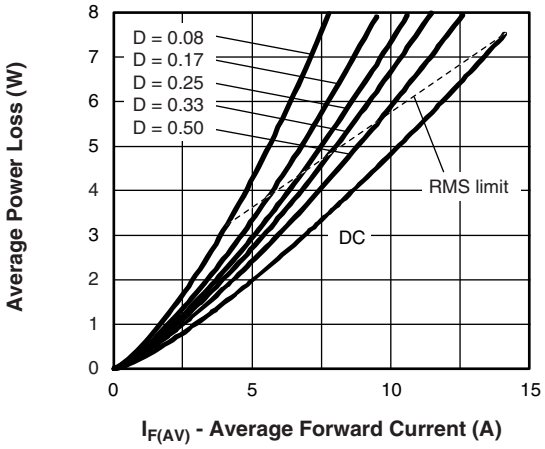

Fig. 6 - Forward Power Loss Characteristics

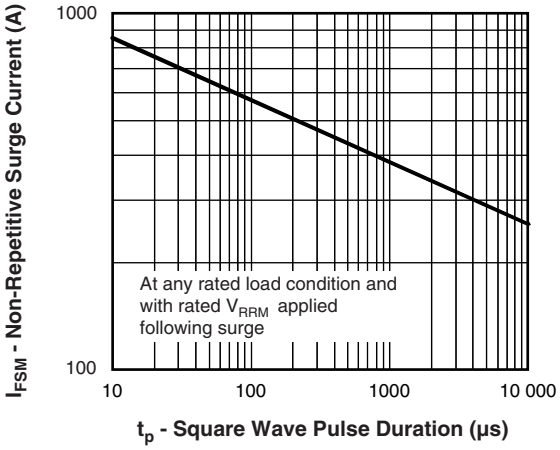

Fig. 7 - Maximum Non-Repetitive Surge Current

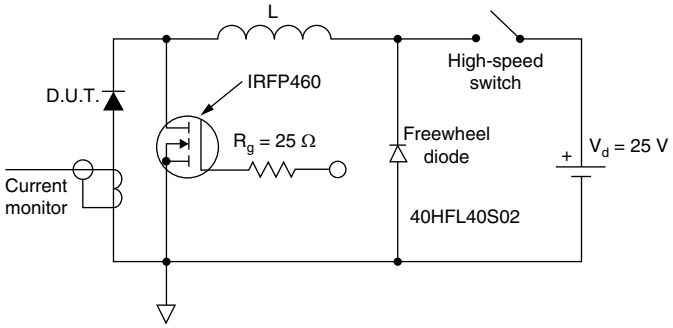

Fig. 8 - Unclamped Inductive Test Circuit

For technical questions within your region: DiodesAmericas@vishay.com, DiodesAsia@vishay.com, DiodesEurope@vishay.com
THIS DOCUMENT IS SUBJECT TO CHANGE WITHOUT NOTICE. THE PRODUCTS DESCRIBED HEREIN AND THIS DOCUMENT ARE SUBJECT TO SPECIFIC DISCLAIMERS, SET FORTH AT www.vishay.com/doc?91000

ORDERING INFORMATION TABLE

Device code	VS-	10	T	Q	045	S	TRL	PbF
	1	2	3	4	5	6	7	8

1 - Vishay Semiconductors product
2 - Current rating (10 A)
3 - Circuit configuration: T = D^2PAK
4 - Schottky "Q" series
5 - Voltage ratings — 035 = 35 V, 045 = 45 V
6 - S = D^2PAK
7 - • None = tube (50 pieces)
• TRL = tape and reel (left oriented)
• TRR = tape and reel (right oriented)
8 - PbF = lead (Pb)-free

LINKS TO RELATED DOCUMENTS	
Dimensions	www.vishay.com/doc?95014
Part marking information	www.vishay.com/doc?95008
Packaging information	www.vishay.com/doc?95032

For technical questions within your region: DiodesAmericas@vishay.com, DiodesAsia@vishay.com, DiodesEurope@vishay.com
THIS DOCUMENT IS SUBJECT TO CHANGE WITHOUT NOTICE. THE PRODUCTS DESCRIBED HEREIN AND THIS DOCUMENT ARE SUBJECT TO SPECIFIC DISCLAIMERS, SET FORTH AT www.vishay.com/doc?91000

D²PAK, TO-262

DIMENSIONS FOR D²PAK in millimeters and inches

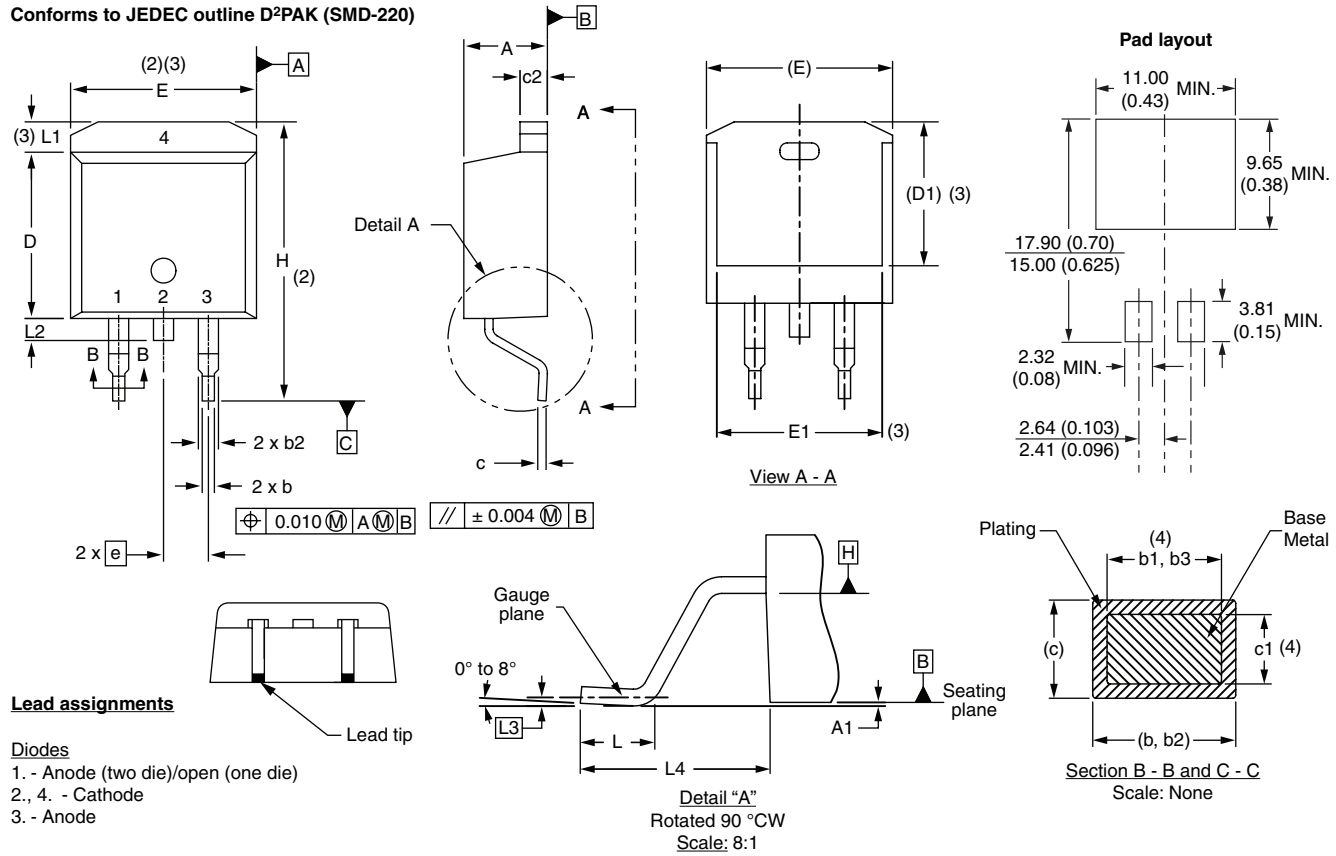

Lead assignments

Diodes
1. - Anode (two die)/open (one die)
2., 4. - Cathode
3. - Anode

SYMBOL	MILLIMETERS		INCHES		NOTES
	MIN.	MAX.	MIN.	MAX.	
A	4.06	4.83	0.160	0.190	
A1	0.00	0.254	0.000	0.010	
b	0.51	0.99	0.020	0.039	
b1	0.51	0.89	0.020	0.035	4
b2	1.14	1.78	0.045	0.070	
b3	1.14	1.73	0.045	0.068	4
c	0.38	0.74	0.015	0.029	
c1	0.38	0.58	0.015	0.023	4
c2	1.14	1.65	0.045	0.065	
D	8.51	9.65	0.335	0.380	2

SYMBOL	MILLIMETERS		INCHES		NOTES
	MIN.	MAX.	MIN.	MAX.	
D1	6.86	8.00	0.270	0.315	3
E	9.65	10.67	0.380	0.420	2, 3
E1	7.90	8.80	0.311	0.346	3
e	2.54 BSC		0.100 BSC		
H	14.61	15.88	0.575	0.625	
L	1.78	2.79	0.070	0.110	
L1	-	1.65	-	0.066	3
L2	1.27	1.78	0.050	0.070	
L3	0.25 BSC		0.010 BSC		
L4	4.78	5.28	0.188	0.208	

Notes

(1) Dimensioning and tolerancing per ASME Y14.5 M-1994
(2) Dimension D and E do not include mold flash. Mold flash shall not exceed 0.127 mm (0.005") per side. These dimensions are measured at the outmost extremes of the plastic body
(3) Thermal pad contour optional within dimension E, L1, D1 and E1
(4) Dimension b1 and c1 apply to base metal only
(5) Datum A and B to be determined at datum plane H
(6) Controlling dimension: inch
(7) Outline conforms to JEDEC outline TO-263AB

DIMENSIONS FOR TO-262 in millimeters and inches

Modified JEDEC outline TO-262

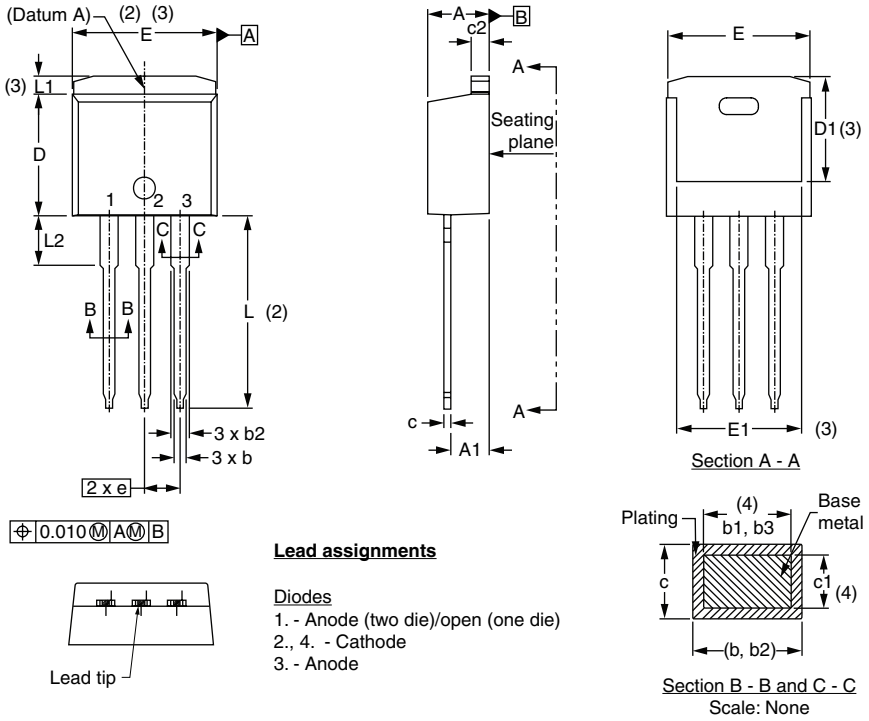

Lead assignments

Diodes
1. - Anode (two die)/open (one die)
2., 4. - Cathode
3. - Anode

SYMBOL	MILLIMETERS		INCHES		NOTES
	MIN.	MAX.	MIN.	MAX.	
A	4.06	4.83	0.160	0.190	
A1	2.03	3.02	0.080	0.119	
b	0.51	0.99	0.020	0.039	
b1	0.51	0.89	0.020	0.035	4
b2	1.14	1.78	0.045	0.070	
b3	1.14	1.73	0.045	0.068	4
c	0.38	0.74	0.015	0.029	
c1	0.38	0.58	0.015	0.023	4
c2	1.14	1.65	0.045	0.065	
D	8.51	9.65	0.335	0.380	2
D1	6.86	8.00	0.270	0.315	3
E	9.65	10.67	0.380	0.420	2, 3
E1	7.90	8.80	0.311	0.346	3
e	2.54 BSC		0.100 BSC		
L	13.46	14.10	0.530	0.555	
L1	-	1.65	-	0.065	3
L2	3.56	3.71	0.140	0.146	

Notes

(1) Dimensioning and tolerancing as per ASME Y14.5M-1994
(2) Dimension D and E do not include mold flash. Mold flash shall not exceed 0.127 mm (0.005") per side. These dimensions are measured at the outmost extremes of the plastic body
(3) Thermal pad contour optional within dimension E, L1, D1 and E1
(4) Dimension b1 and c1 apply to base metal only
(5) Controlling dimension: inches
(6) Outline conform to JEDEC TO-262 except A1 (maximum), b (minimum) and D1 (minimum) where dimensions derived the actual package outline

Disclaimer

ALL PRODUCT, PRODUCT SPECIFICATIONS AND DATA ARE SUBJECT TO CHANGE WITHOUT NOTICE TO IMPROVE RELIABILITY, FUNCTION OR DESIGN OR OTHERWISE.

Vishay Intertechnology, Inc., its affiliates, agents, and employees, and all persons acting on its or their behalf (collectively, "Vishay"), disclaim any and all liability for any errors, inaccuracies or incompleteness contained in any datasheet or in any other disclosure relating to any product.

Vishay makes no warranty, representation or guarantee regarding the suitability of the products for any particular purpose or the continuing production of any product. To the maximum extent permitted by applicable law, Vishay disclaims (i) any and all liability arising out of the application or use of any product, (ii) any and all liability, including without limitation special, consequential or incidental damages, and (iii) any and all implied warranties, including warranties of fitness for particular purpose, non-infringement and merchantability.

Statements regarding the suitability of products for certain types of applications are based on Vishay's knowledge of typical requirements that are often placed on Vishay products in generic applications. Such statements are not binding statements about the suitability of products for a particular application. It is the customer's responsibility to validate that a particular product with the properties described in the product specification is suitable for use in a particular application. Parameters provided in datasheets and/or specifications may vary in different applications and performance may vary over time. All operating parameters, including typical parameters, must be validated for each customer application by the customer's technical experts. Product specifications do not expand or otherwise modify Vishay's terms and conditions of purchase, including but not limited to the warranty expressed therein.

Except as expressly indicated in writing, Vishay products are not designed for use in medical, life-saving, or life-sustaining applications or for any other application in which the failure of the Vishay product could result in personal injury or death. Customers using or selling Vishay products not expressly indicated for use in such applications do so at their own risk. Please contact authorized Vishay personnel to obtain written terms and conditions regarding products designed for such applications.

No license, express or implied, by estoppel or otherwise, to any intellectual property rights is granted by this document or by any conduct of Vishay. Product names and markings noted herein may be trademarks of their respective owners.

Material Category Policy

Vishay Intertechnology, Inc. hereby certifies that all its products that are identified as RoHS-Compliant fulfill the definitions and restrictions defined under Directive 2011/65/EU of The European Parliament and of the Council of June 8, 2011 on the restriction of the use of certain hazardous substances in electrical and electronic equipment (EEE) - recast, unless otherwise specified as non-compliant.

Please note that some Vishay documentation may still make reference to RoHS Directive 2002/95/EC. We confirm that all the products identified as being compliant to Directive 2002/95/EC conform to Directive 2011/65/EU.

Vishay Intertechnology, Inc. hereby certifies that all its products that are identified as Halogen-Free follow Halogen-Free requirements as per JEDEC JS709A standards. Please note that some Vishay documentation may still make reference to the IEC 61249-2-21 definition. We confirm that all the products identified as being compliant to IEC 61249-2-21 conform to JEDEC JS709A standards.

НИОКР СИСТЕМС

ООО «НИОКРсистемс» - это оперативные поставки широкого спектра электронных компонентов отечественного и импортного производства напрямую от производителей и с крупнейших мировых складов. Реализуемая нашей компанией продукция насчитывает более полумиллиона наименований.

Благодаря этому наша компания предлагает к поставке практически не ограниченный ассортимент компонентов как оптовыми, мелкооптовыми партиями, так и в розницу.

Благодаря развитой сети поставщиков, помогаем в поиске и приобретении экзотичных или снятых с производства компонентов.

Наша компания это:

- Гарантия качества поставляемой продукции
- Широкий ассортимент
- Минимальные сроки поставок
- Техническая поддержка
- Подбор комплектации
- Индивидуальный подход
- Гибкое ценообразование
- Работаем по 275 ФЗ

ООО «НИОКР СИТЕМС»
Москва, 125362, Россия, ул. Вишневая, д. 9, к. 1, Блок 104 а и 104 в

Телефон: 8 (495) 268-14-82
Email: n@nsistems.ru

ИНН: 7735154786
ОГРН: 1167746717709